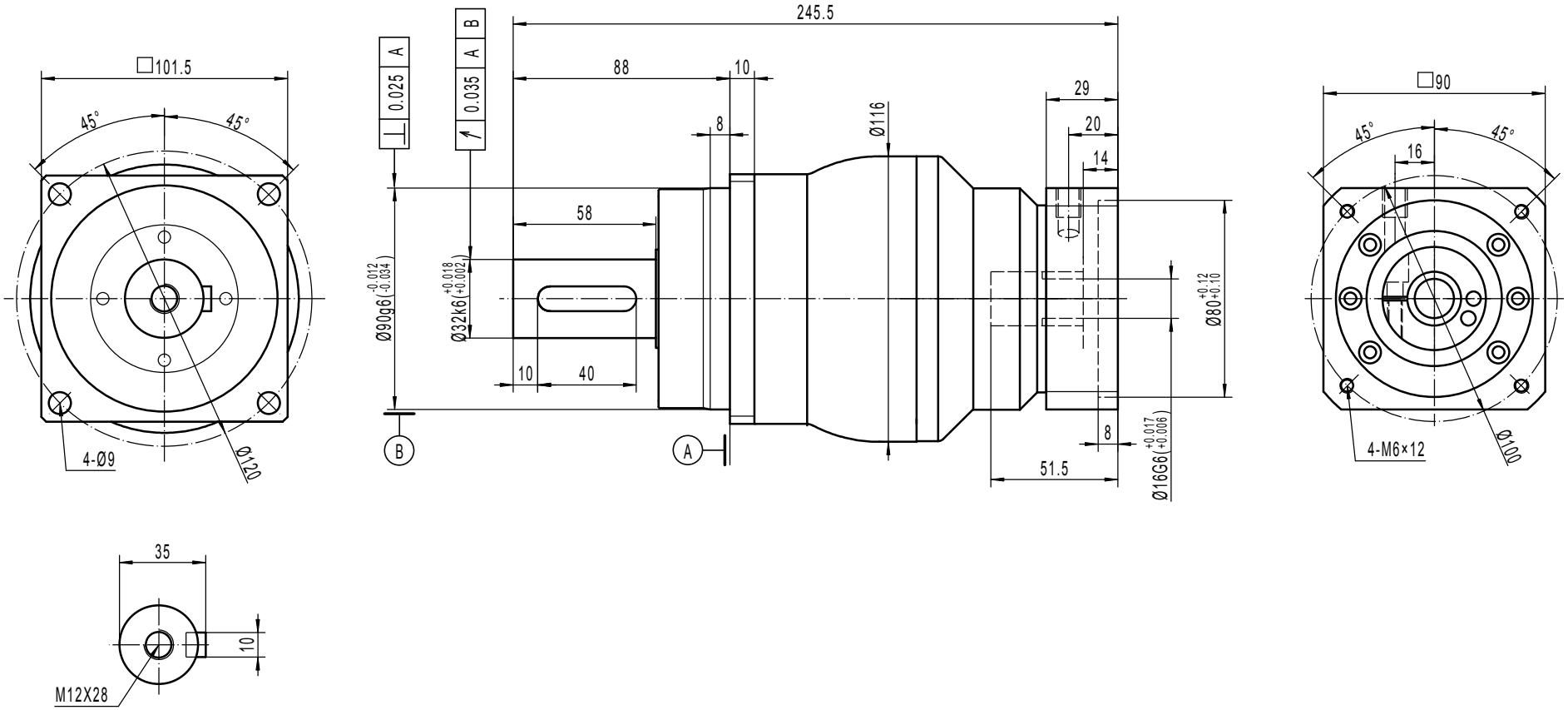

Note 1: This drawing shows the dimensions of X-Treme-SQ-ST-060 - 2 stages (It is common to all ratios from 12 to 100)
Note 2: Smooth shaft version available at no charge, DIN5480 splined shaft version available as a paying option
Note 3: This version is using a compact input stage. In case of need for more torque, please select the standard version.
Note 4: Full technical ratings can be found on www.reckondrives.com
Note 5: Our technical support team can provide accurate data about your specific application at drawing_request@reckondrives.com

©Reckon Drives, 1, rue Georges GUYNEMER, 42160 ANDREZIEUX-BOUTHEON, FRANCE / contact@reckondrives.com

RECKON Innovation needs performance

Designed by MMI	Version 1.0
Date: 02-18-2020	
X-TREME-SQ-ST-060 2 stages / compact	
Motor: Allen Bradley BPL-B310	