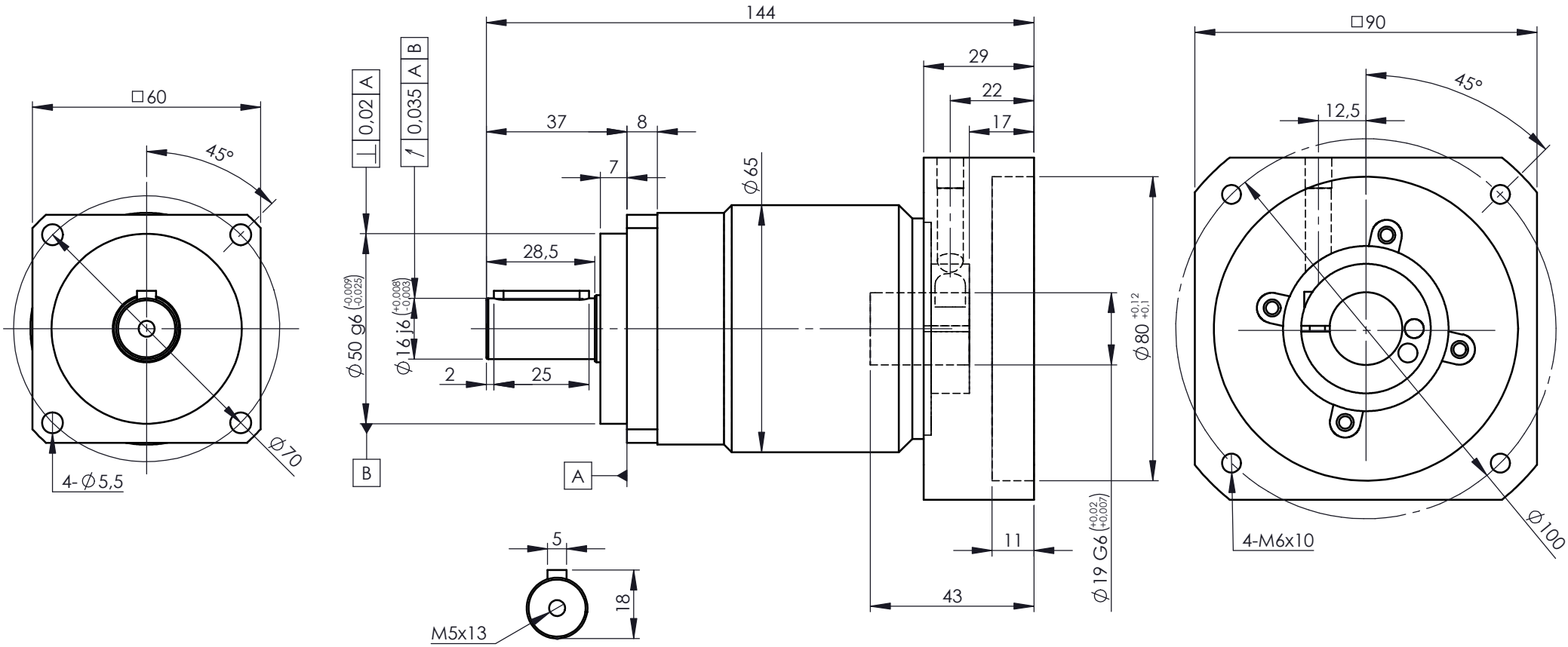


A bushing will be supplied if your motor shaft is smaller than ø19mm

For ratings and other technical data please refer to www.reckondrives.com

RECKON®
Innovation needs performance

Drawing n°

LS-060-L2P-K-19-F060-106

LIVELY-SQ-ST-060 - 2 stages (Ratios 16 to 100)

with adaptating plate ø19x43-80-100-M6

| Size | Date | Designed by |
|---|---|---|
| A4 | 08/28/2024 | L. Bonnassieux |