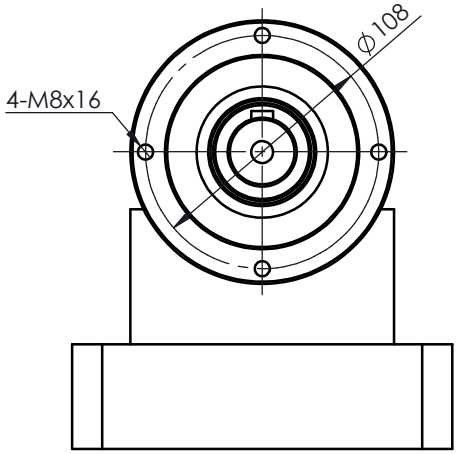

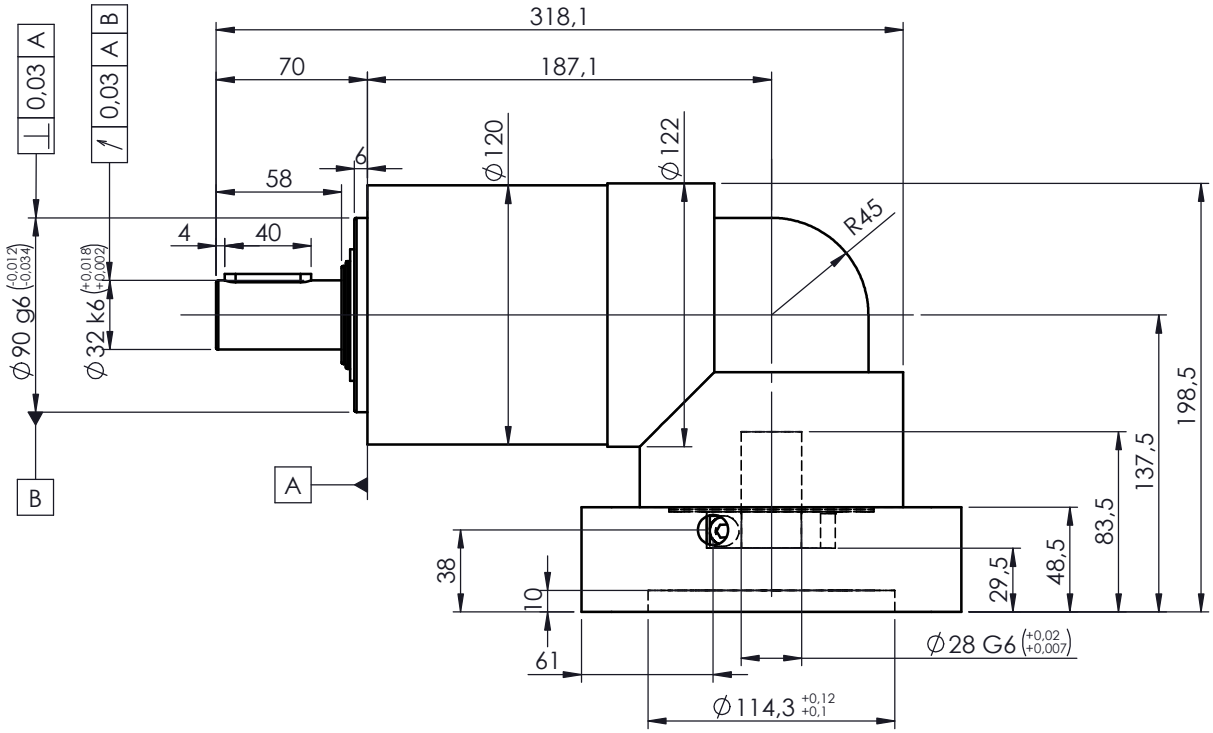

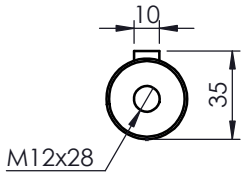

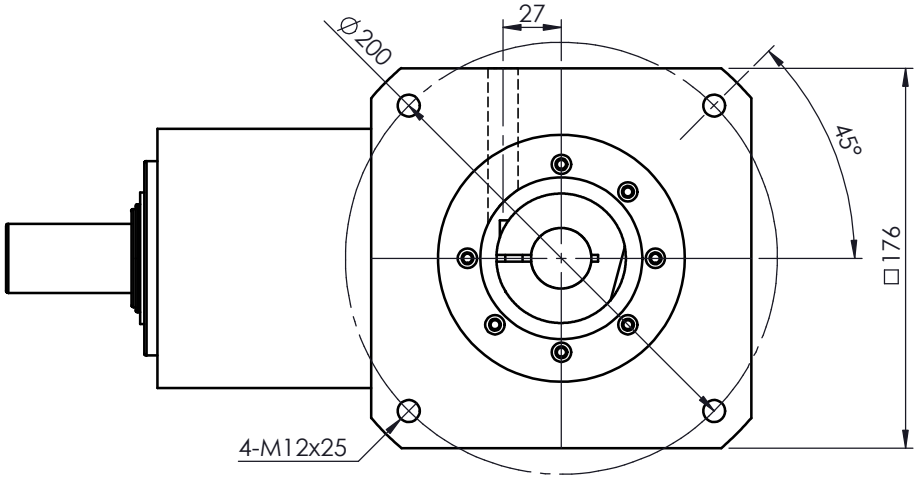

RECKON®
Innovation needs performance

Drawing n°

ACR-120-L2P-K-28-F120-111

ACCESS-CI-RA-120 - 2 stages (Ratios 16 to 100)

with adaptating plate ø28x83,5-114,3-200-M12

Size	Date	Designed by
A4	11/04/2024	L. Bonnassieux

A bushing will be supplied if your motor shaft is smaller than ø28mm

For ratings and other technical data please refer to www.reckondrives.com