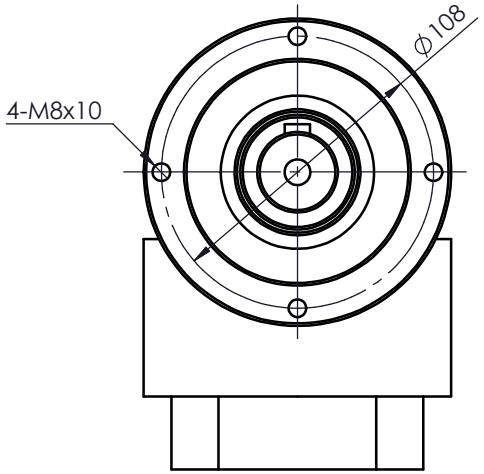

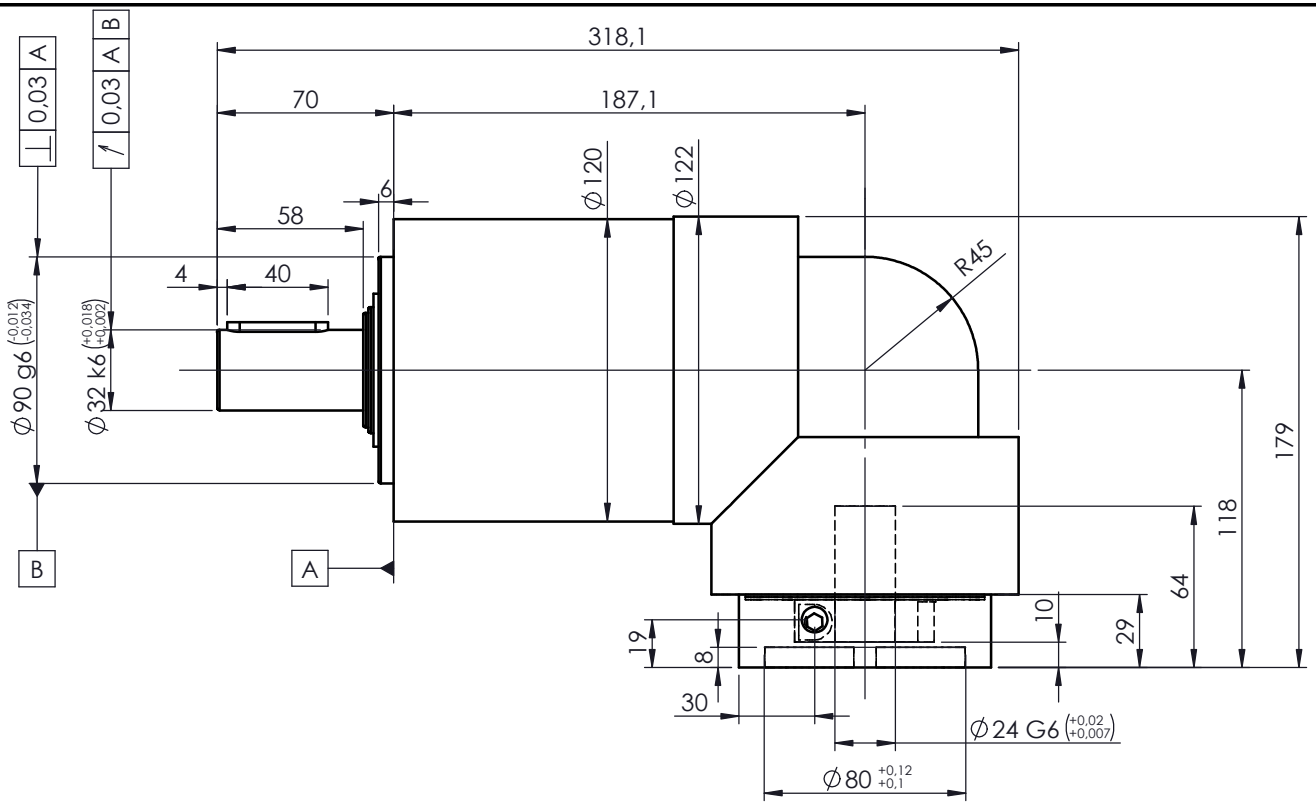

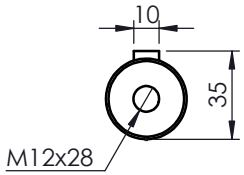

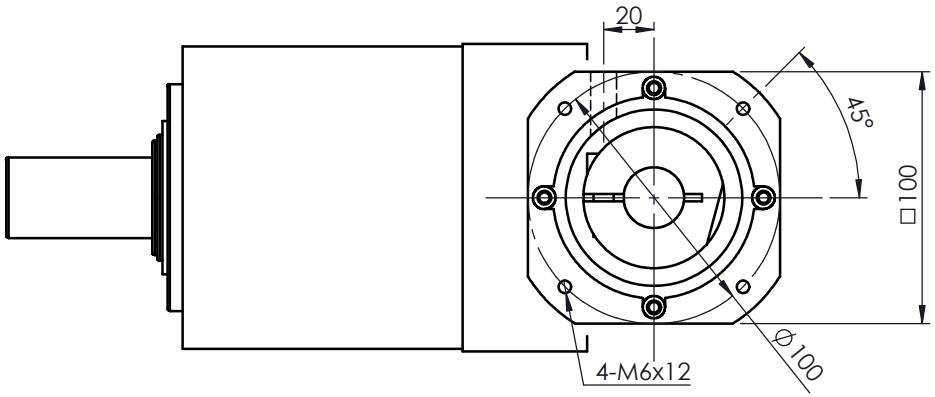

A bushing will be supplied if your motor shaft is smaller than ø24mm

For ratings and other technical data please refer to www.reckondrives.com

RECKON®
Innovation needs performance

Drawing n°

ACR-120-L2P-K-24-F120-013

ACCESS-CI-RA-120 - 2 stages (Ratios 16 to 100)

with adaptating plate ø24x64-80-100-M6

Size	Date	Designed by
A4	11/04/2024	L. Bonnassieux