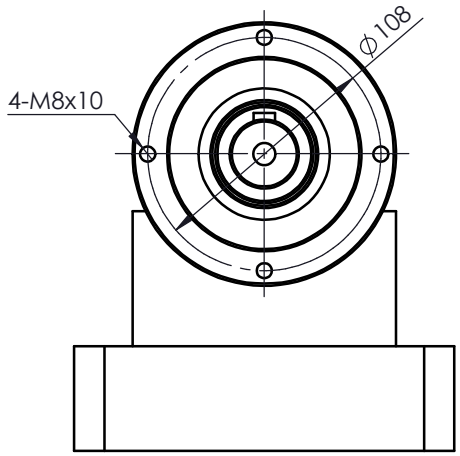

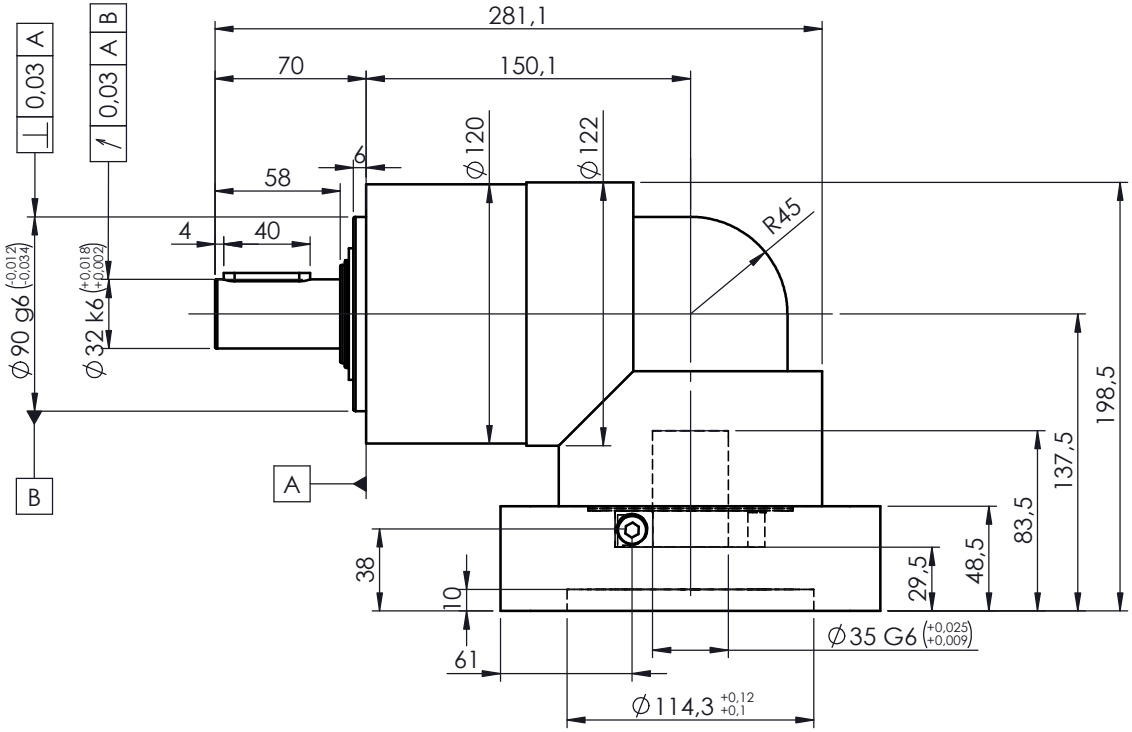

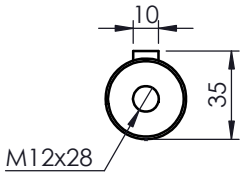

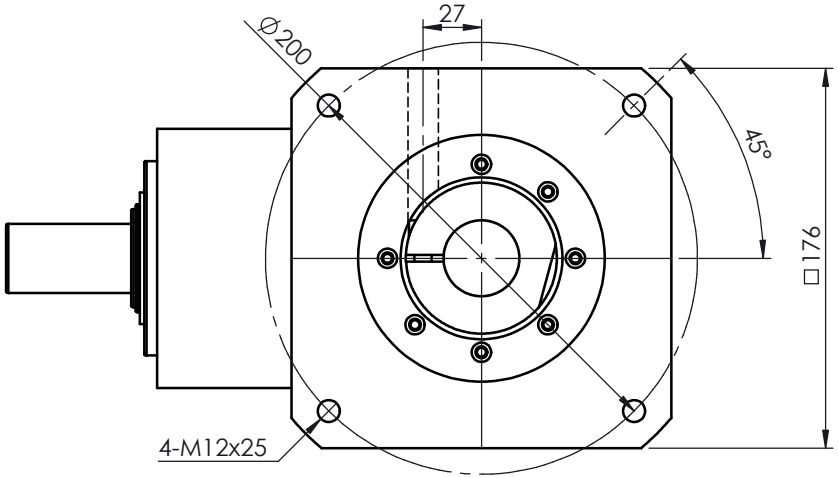

A bushing will be supplied if your motor shaft is smaller than ø35mm

For ratings and other technical data please refer to www.reckondrives.com

RECKON®
Innovation needs performance

Drawing n°

ACR-120-L1-K-35-F120-111

ACCESS-CI-RA-120 - 1 stage (Ratios 3 to 10)

with adaptating plate ø35x83,5-114,3-200-M12

Size	Date	Designed by
A4	11/04/2024	L. Bonnassieux