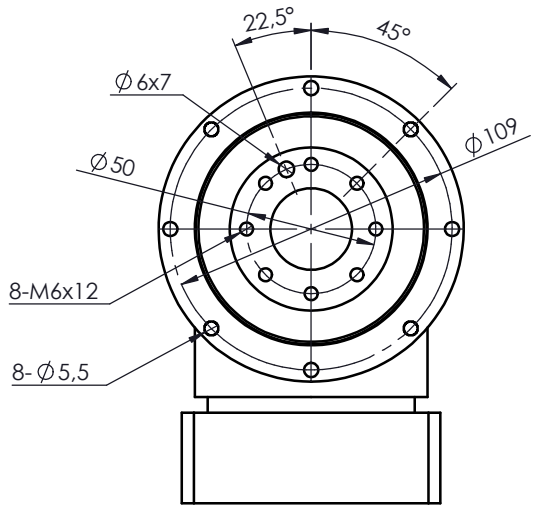

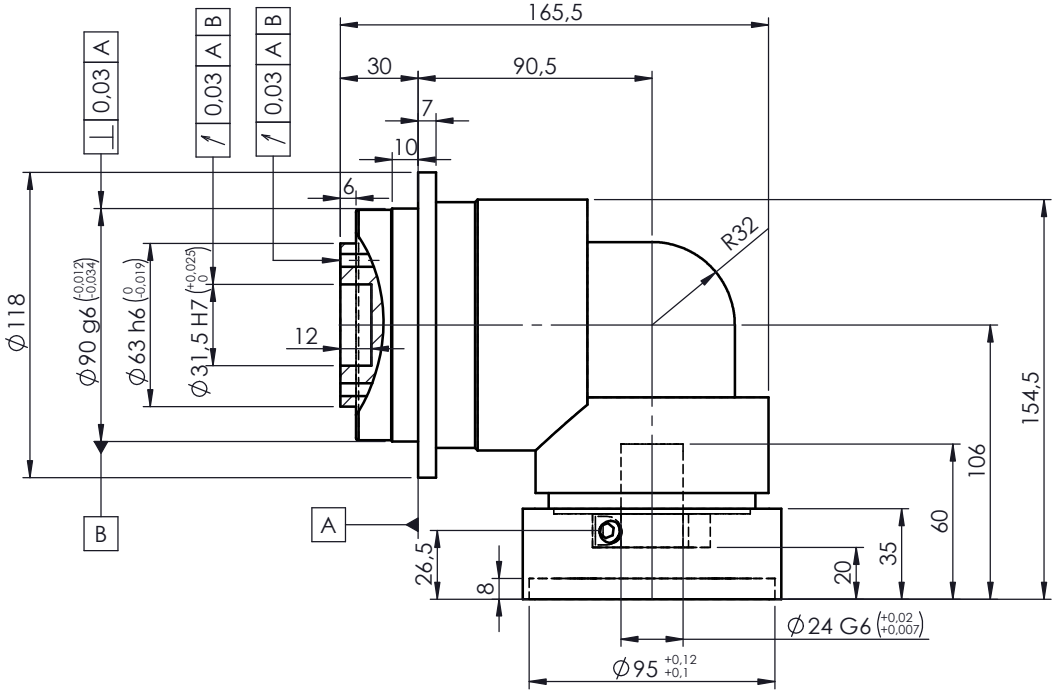

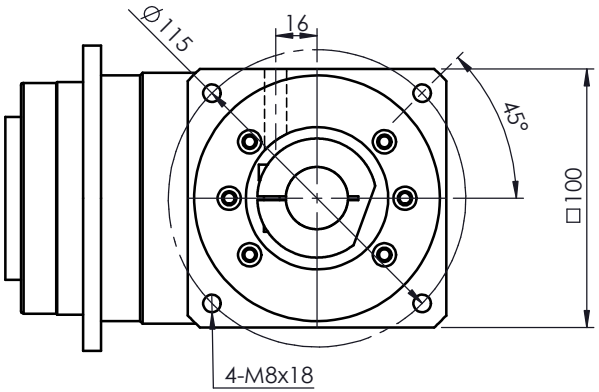

A bushing will be supplied if your motor shaft is smaller than ø24mm

For ratings and other technical data please refer to www.reckondrives.com

RECKON®
Innovation needs performance

Drawing n°

UCR-090-L1B-F-24-F090-006A

ULTIMATE-CI-RA-090 - 1 stage (Ratios 4 to 10)

with adaptating plate ø24x60-95-115-M8

Size	Date	Designed by
A4	10/31/2025	L. Bonnassieux