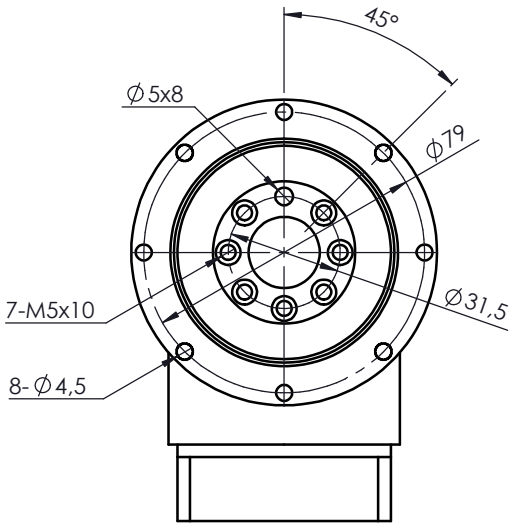

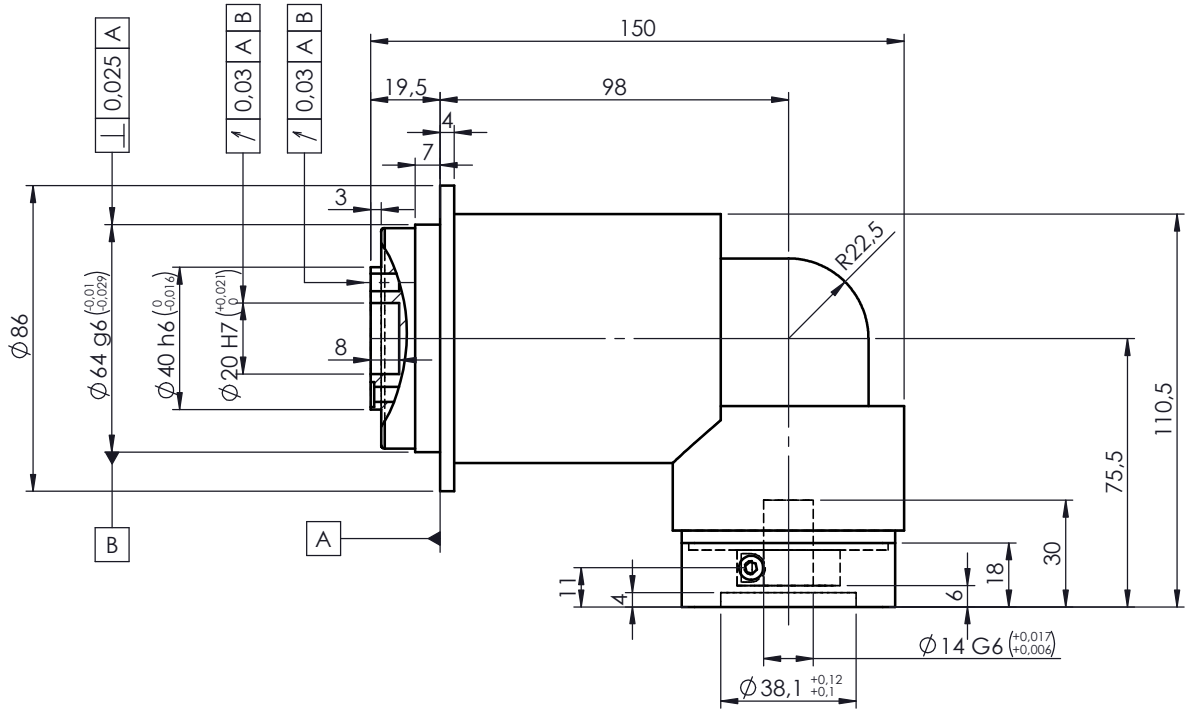

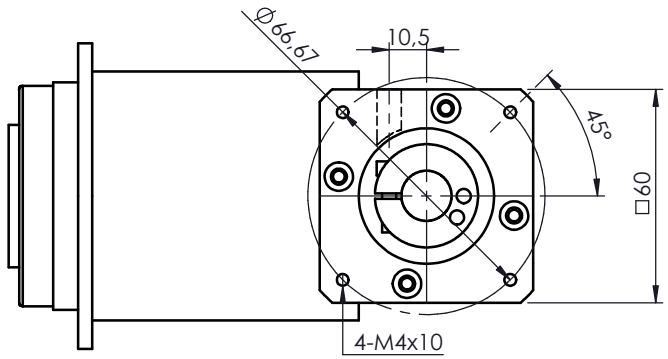

A bushing will be supplied if your motor shaft is smaller than ø14mm

For ratings and other technical data please refer to www.reckondrives.com

RECKON®
Innovation needs performance

Drawing n°

UCR-064-L2P-F-14-F060-108

ULTIMATE-CI-RA-064 - 2 stages (Ratios 16 to 100)

with adaptating plate ø14x30-38,1-66,67-M4

Size	Date	Designed by
A4	10/31/2025	L. Bonnassieux