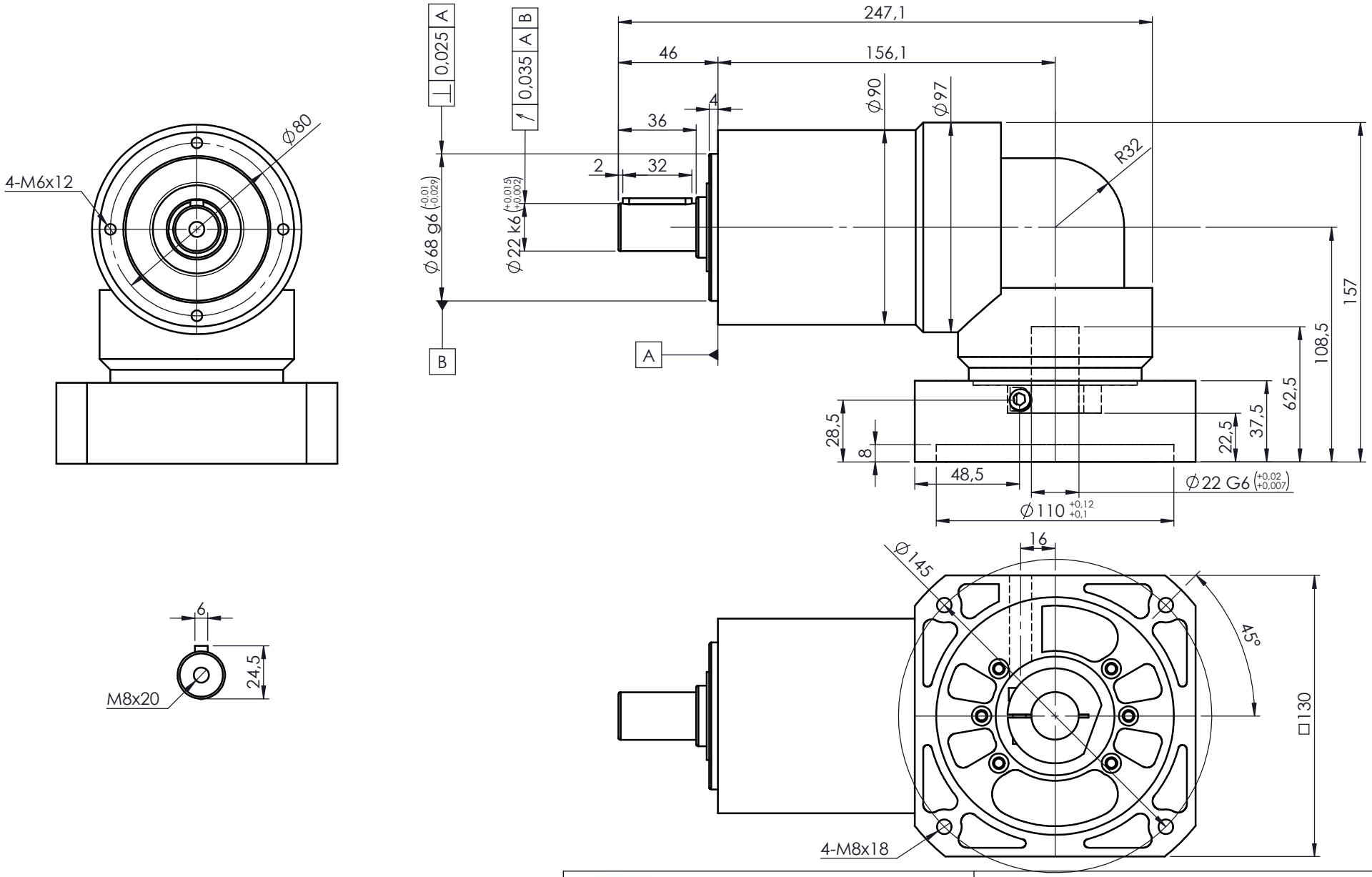


RECKON®
Innovation needs performance

Drawing n°

ACR-090-L2P-K-22-F090-103

ACCESS-CI-RA-090 - 2 stages (Ratios 16 to 100)

with adaptating plate ø22x62,5-110-145-M8

| Size | Date | Designed by |
|---|---|---|
| A4 | 10/30/2024 | L. Bonnassieux |

A bushing will be supplied if your motor shaft is smaller than ø22mm

For ratings and other technical data please refer to www.reckondrives.com