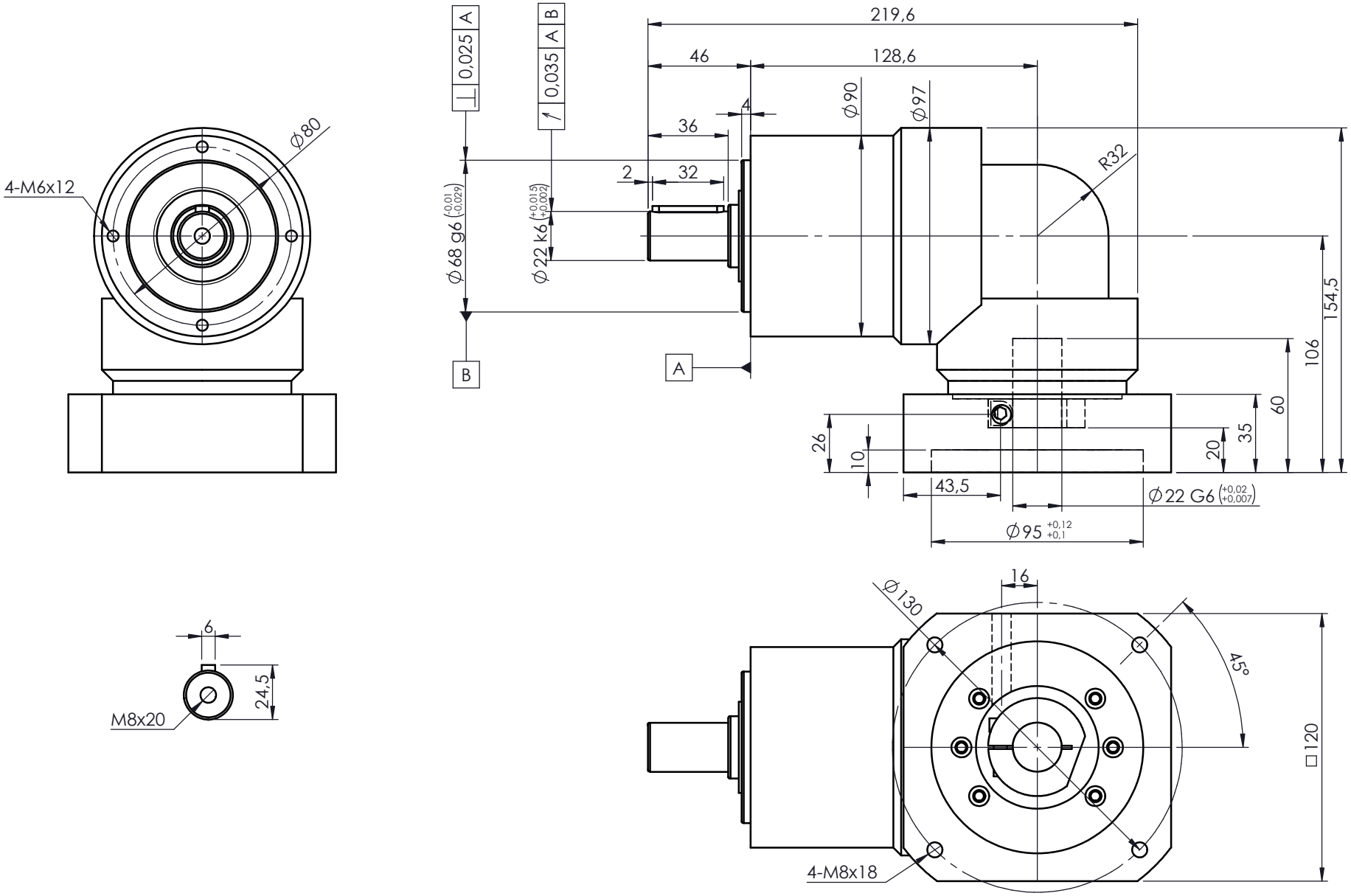

RECKON®
Innovation needs performance

Drawing n°

ACR-090-L1-K-22-F090-004

ACCESS-CI-RA-090 - 1 stage (Ratios 3 to 10)

with adaptating plate ø22x60-95-130-M8

Size	Date	Designed by
A4	10/30/2024	L. Bonnassieux

A bushing will be supplied if your motor shaft is smaller than ø22mm

For ratings and other technical data please refer to www.reckondrives.com