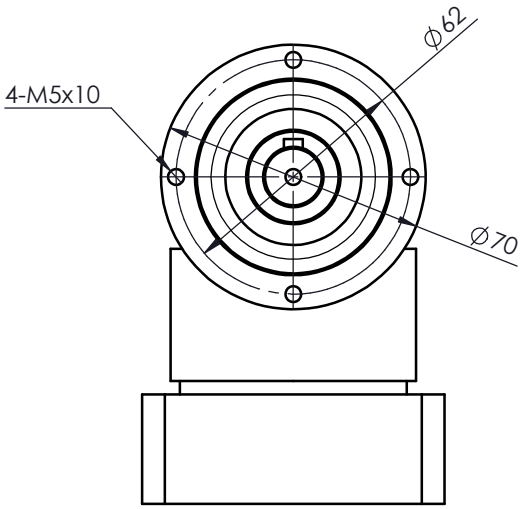


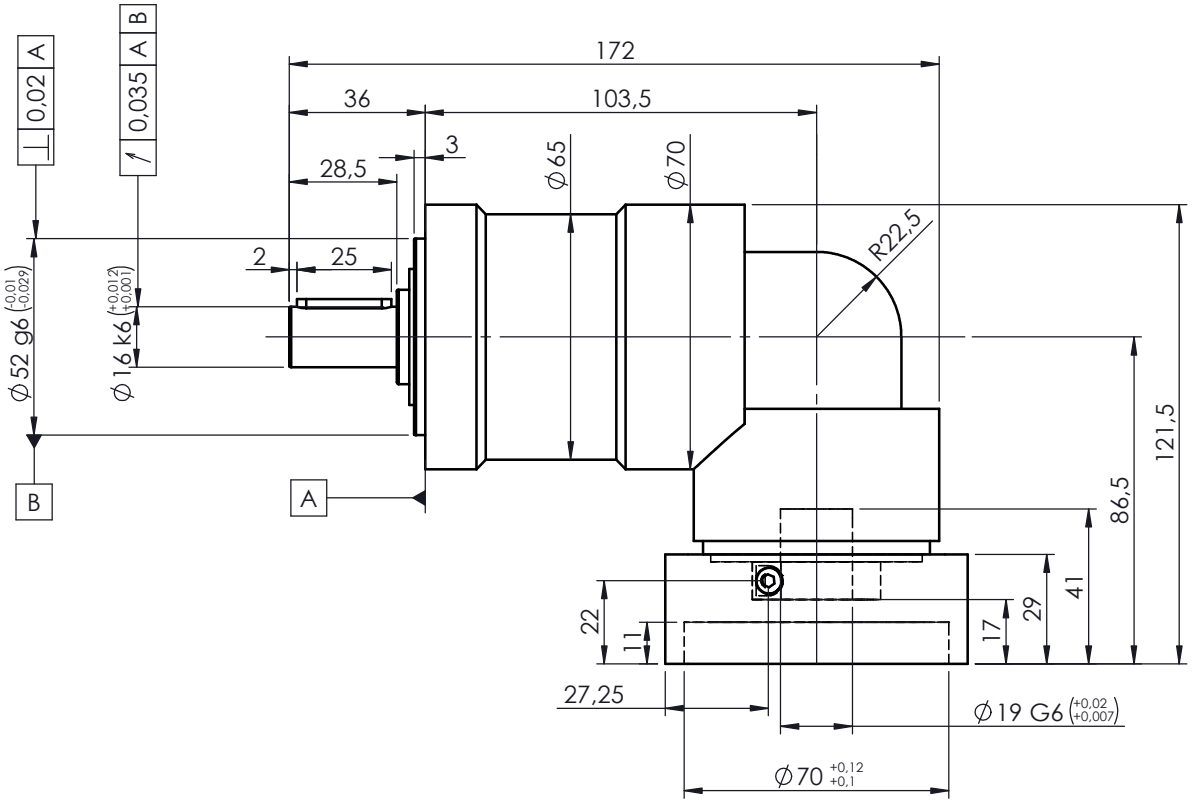


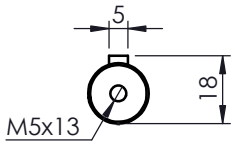


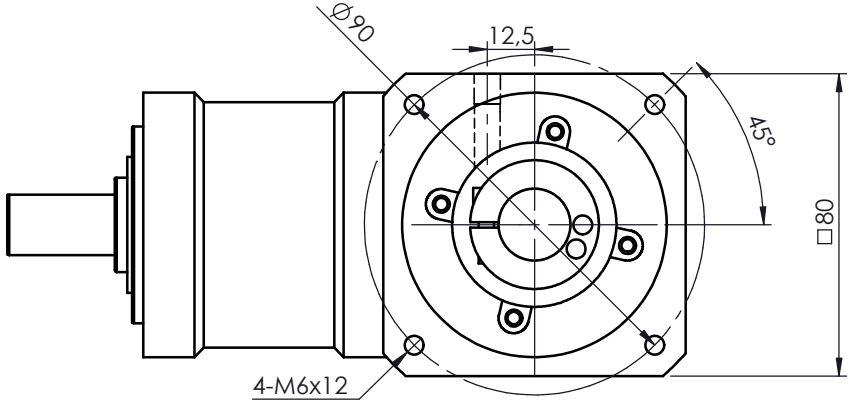


RECKON®
Innovation needs performance

Drawing n°

ACR-070-L1-K-19-F060-102A

ACCESS-CI-RA-070 - 1 stage (Ratios 3 to 10)

with adaptating plate ø19x41-70-90-M6

| Size | Date | Designed by |
|---|---|---|
| A4 | 10/29/2024 | L. Bonnassieux |

A bushing will be supplied if your motor shaft is smaller than ø19mm

For ratings and other technical data please refer to www.reckondrives.com