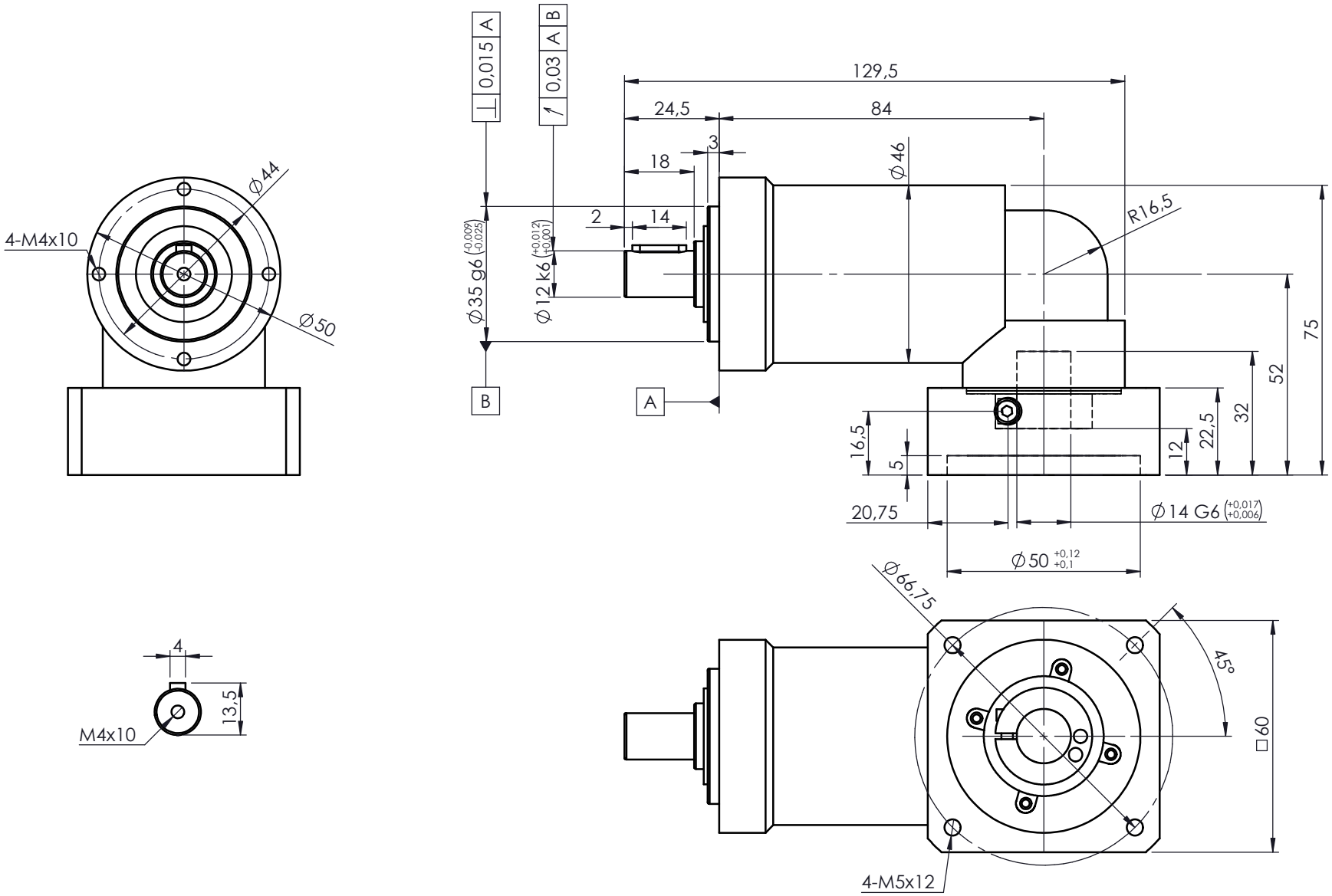

A bushing will be supplied if your motor shaft is smaller than ø14mm

For ratings and other technical data please refer to www.reckondrives.com

RECKON®
Innovation needs performance

Drawing n°

ACR-050-L2P-K-14-F040-134

ACCESS-CI-RA-050 - 2 stages (Ratios 16 to 100)

with adaptating plate ø14x32-50-66,75-M5

Size	Date	Designed by
A4	10/29/2024	L. Bonnassieux