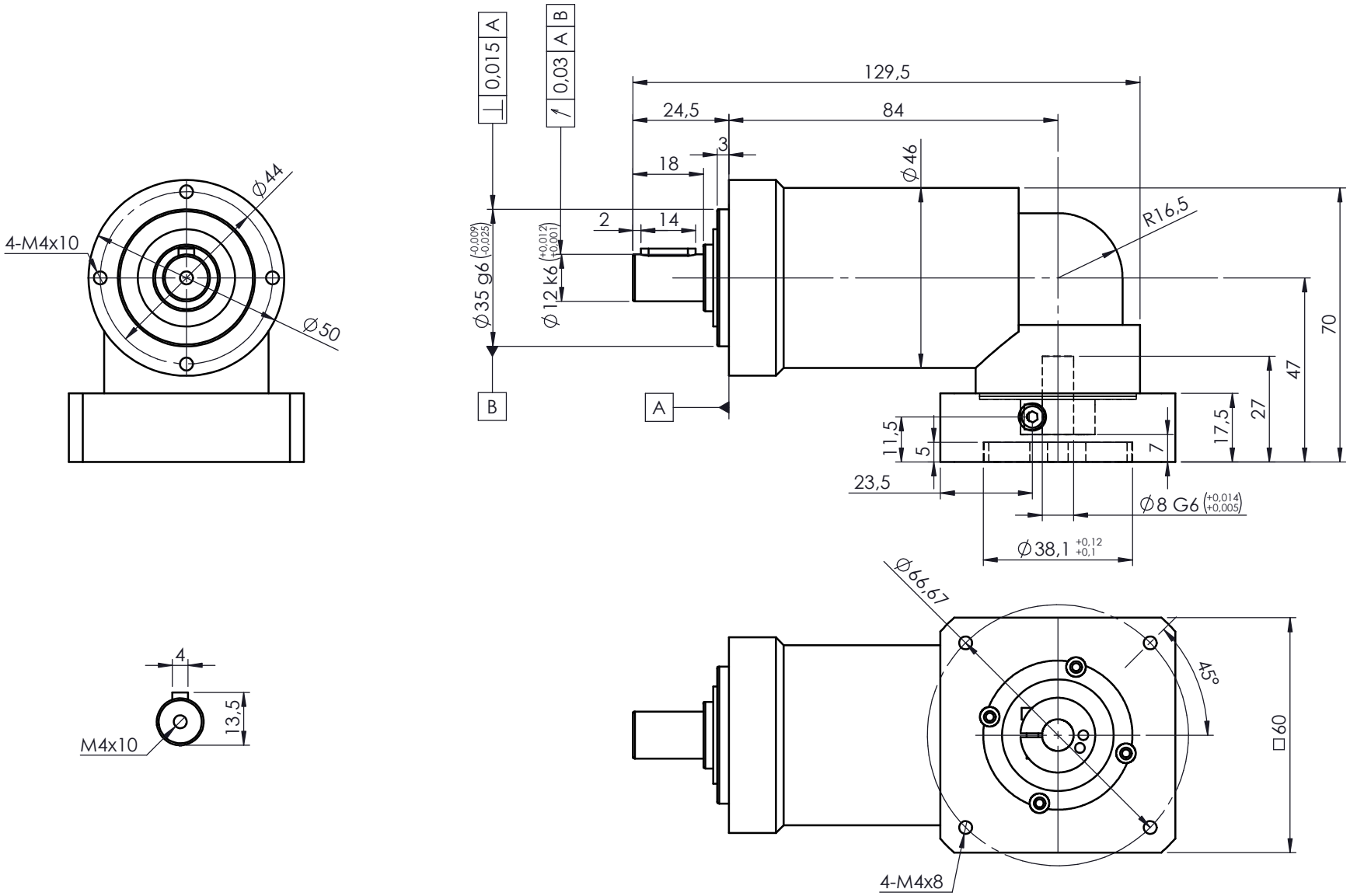

A bushing will be supplied if your motor shaft is smaller than ø8mm

For ratings and other technical data please refer to www.reckondrives.com

RECKON®
Innovation needs performance

Drawing n°

ACR-050-L2P-K-8-F040-103

ACCESS-CI-RA-050 - 2 stages (Ratios 16 to 100)

with adaptating plate ø8x27-38,1-66,67-M4

Size	Date	Designed by
A4	10/29/2024	L. Bonnassieux