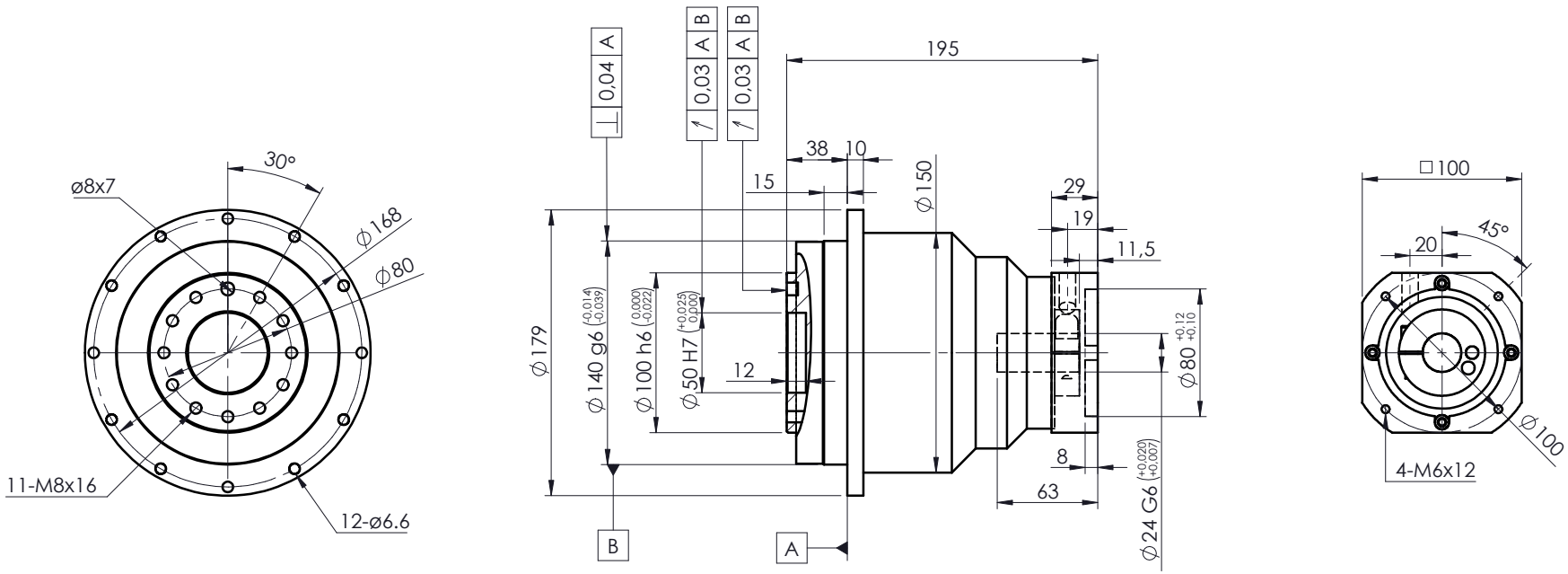

A bushing will be supplied if your motor shaft is smaller than ø24mm

For ratings and other technical data please refer to www.reckondrives.com

RECKON®
Innovation needs performance

Drawing n°

UC-140-L2RD-F-24-F120-013

ULTIMATE-CI-ST-140 - 2 stages (Ratios 16 to 100)

with adaptating plate ø24x63-80-100-M6

Size	Date	Designed by
A4	05/02/2025	L. Bonnassieux