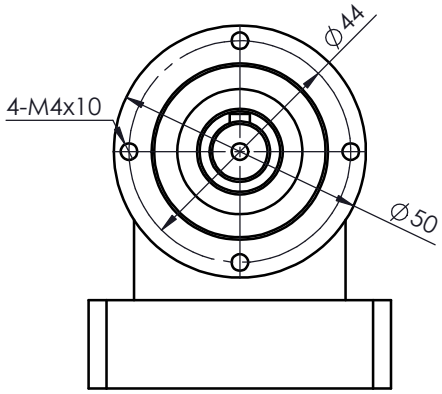

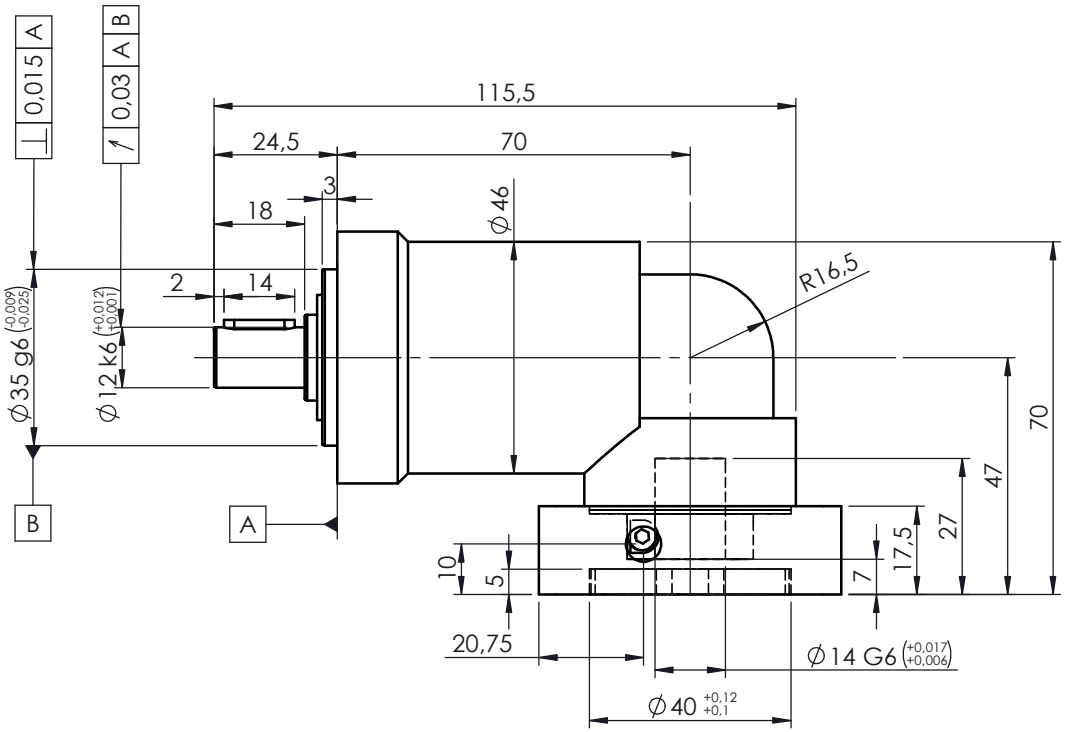

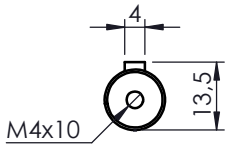

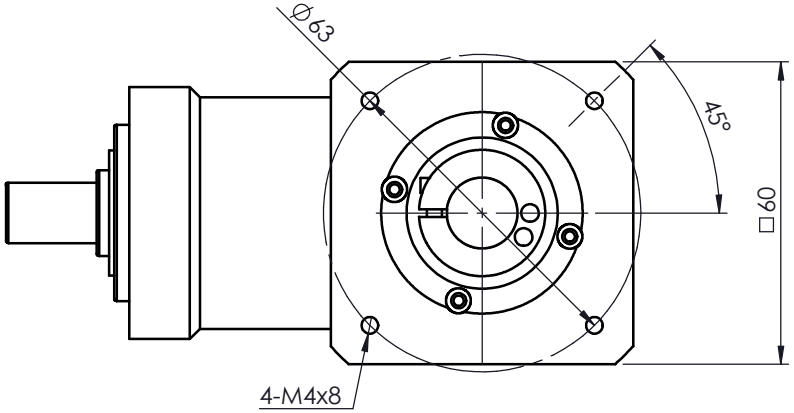

A bushing will be supplied if your motor shaft is smaller than ø14mm

For ratings and other technical data please refer to www.reckondrives.com

RECKON®
Innovation needs performance

Drawing n°

ACR-050-L1-K-14-F040-125

ACCESS-CI-RA-050 - 1 stage (Ratios 3 to 10)

with adaptating plate ø14x27-40-63-M4

Size	Date	Designed by
A4	10/29/2024	L. Bonnassieux