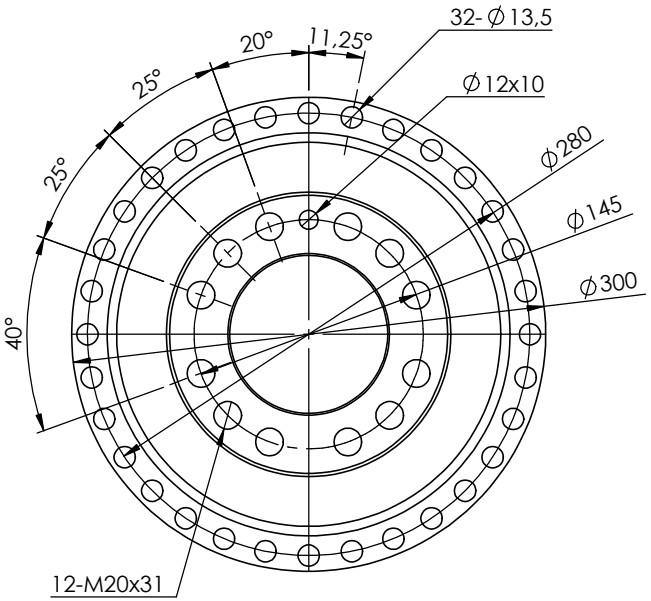

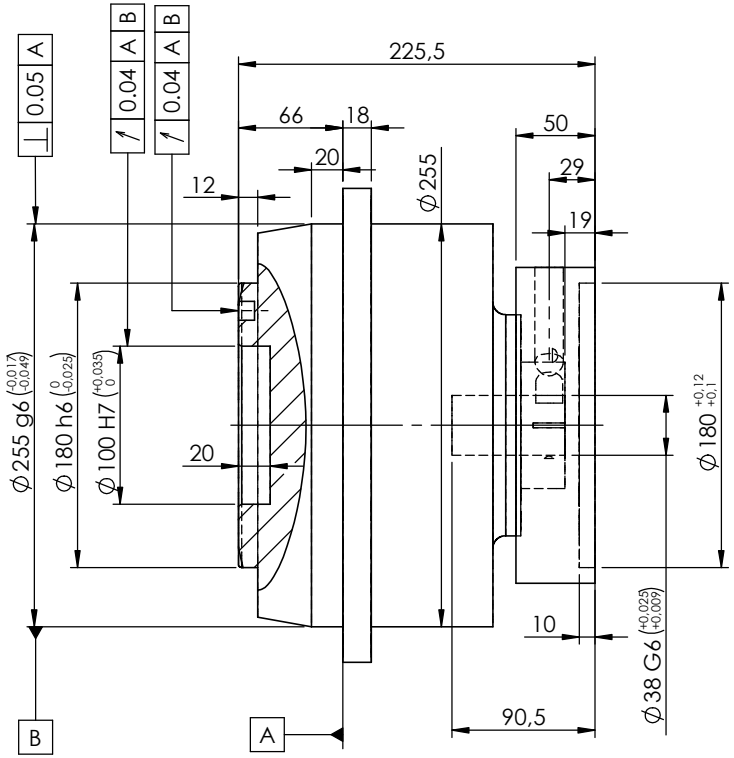

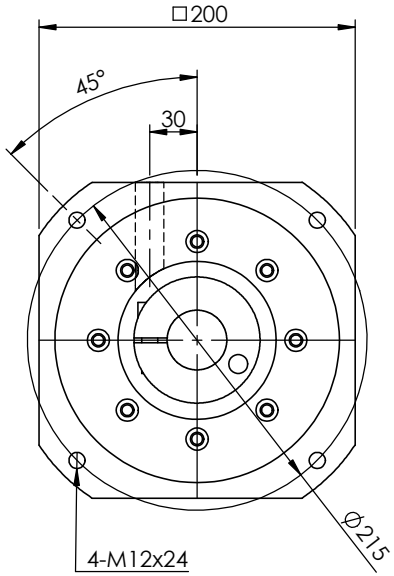

A bushing will be supplied if your motor shaft is smaller than ø38mm

For ratings and other technical data please refer to www.reckondrives.com

RECKON®
Innovation needs performance

Drawing n°

UCHT-255-L1G-F-38-F180-004

ULTIMATE-CI-HT-255 - 1 stage (Ratios 4 or 5,5)

with adaptating plate ø38x90,5-180-215-M12

Size	Date	Designed by
A4	01/28/2026	L. Bonnassieux