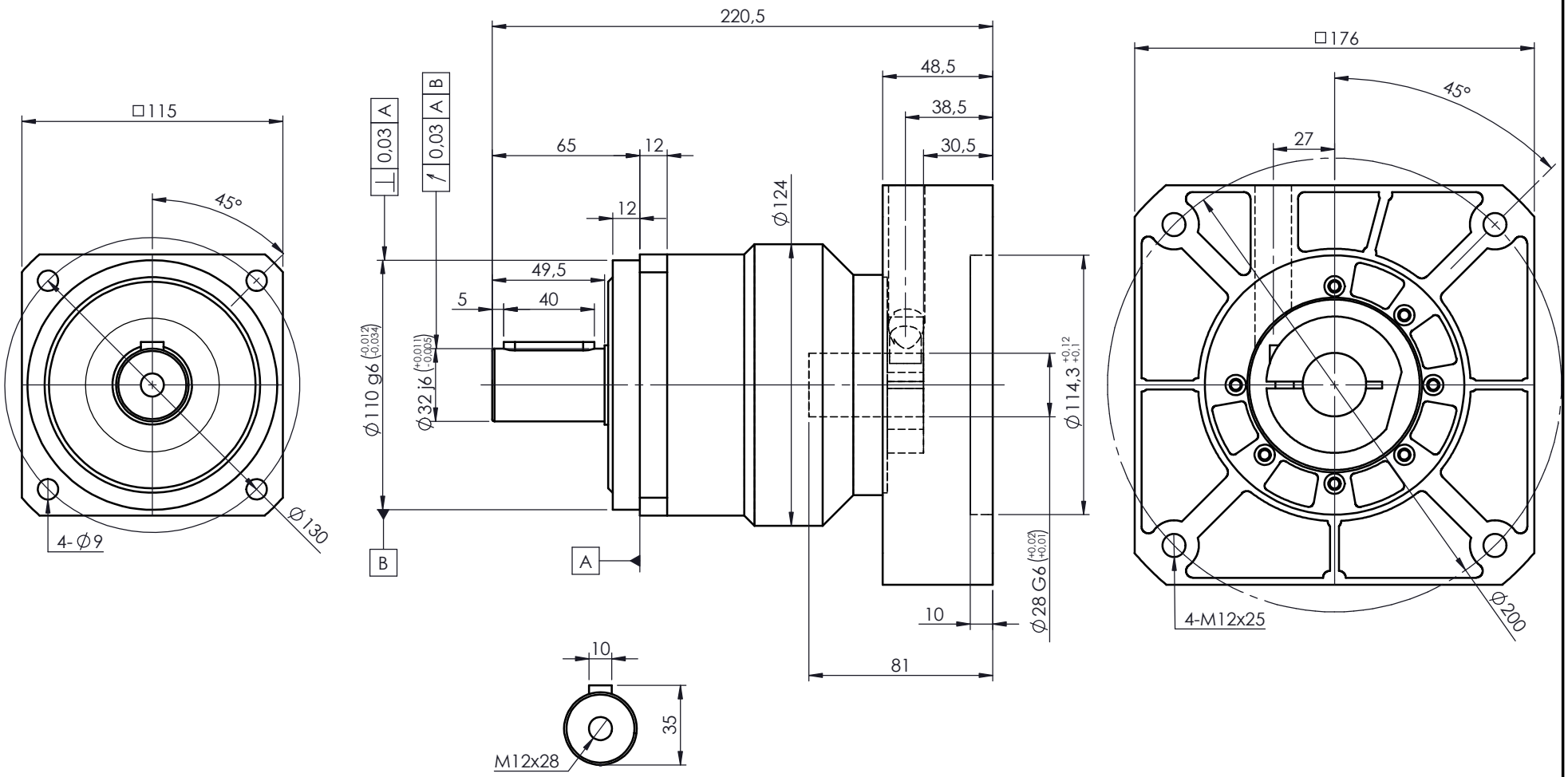

A bushing will be supplied if your motor shaft is smaller than ø28mm

For ratings and other technical data please refer to www.reckondrives.com

RECKON®
Innovation needs performance

Drawing n°

LS-120-L1-K-28-F120-111

LIVELY-SQ-ST-120 - 1 stage (Ratios 3 to 10)

with adaptating plate ø28x81-114,3-200-M12

Size	Date	Designed by
A4	10/31/2025	L. Bonnassieux