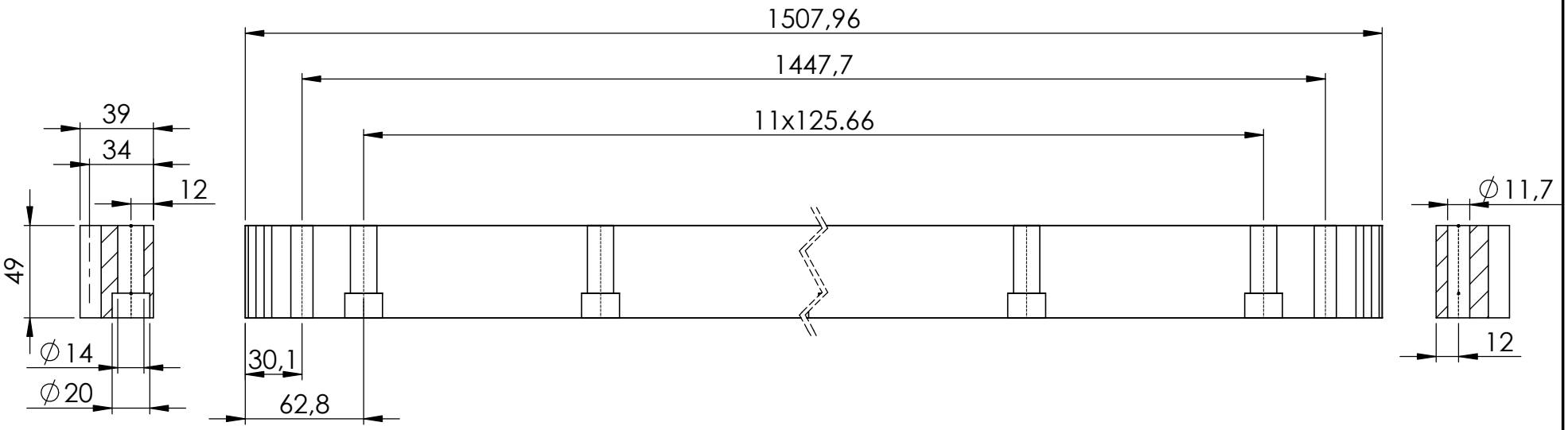

RECKON®
Innovation needs performance

Ordering code
M5-SAI5-1500-H1-000

Mass:
18.40 kg

Description
Module 5 rack
Material C45 Teeth hardened to 50-55 HRC
Teeth ground to DIN 5 precision class