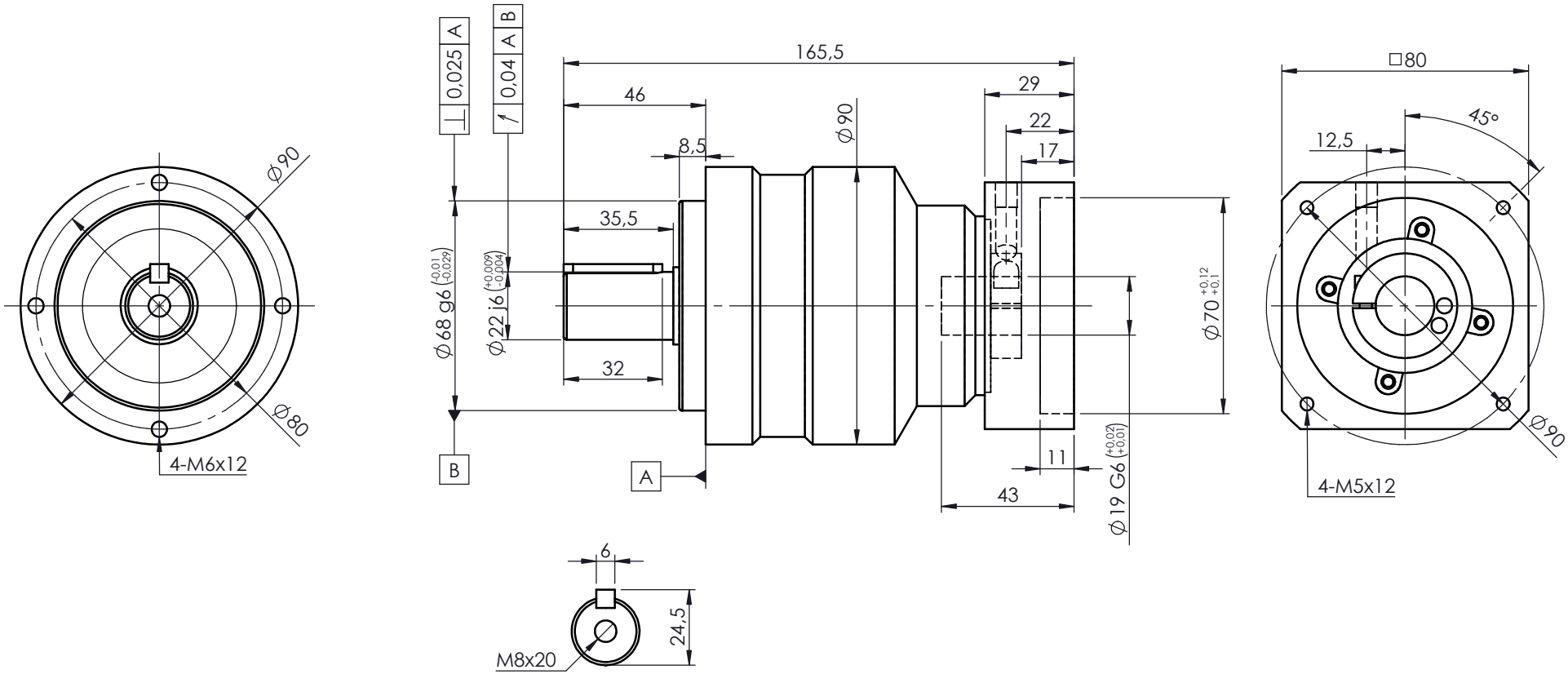

A bushing will be supplied if your motor shaft is smaller than ø19mm

For ratings and other technical data please refer to www.reckondrives.com

RECKON®
Innovation needs performance

Drawing n°

LC-090-L2R-K-19-F060-402

LIVELY-CI-ST-090 - 2 stages (Ratios 16 to 100)

with adaptating plate ø19x43-70-90-M5

Size	Date	Designed by
A4	08/27/2024	L. Bonnassieux