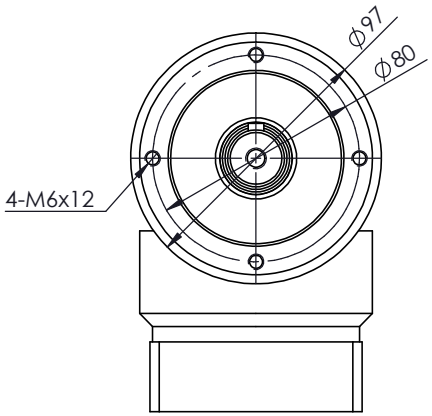

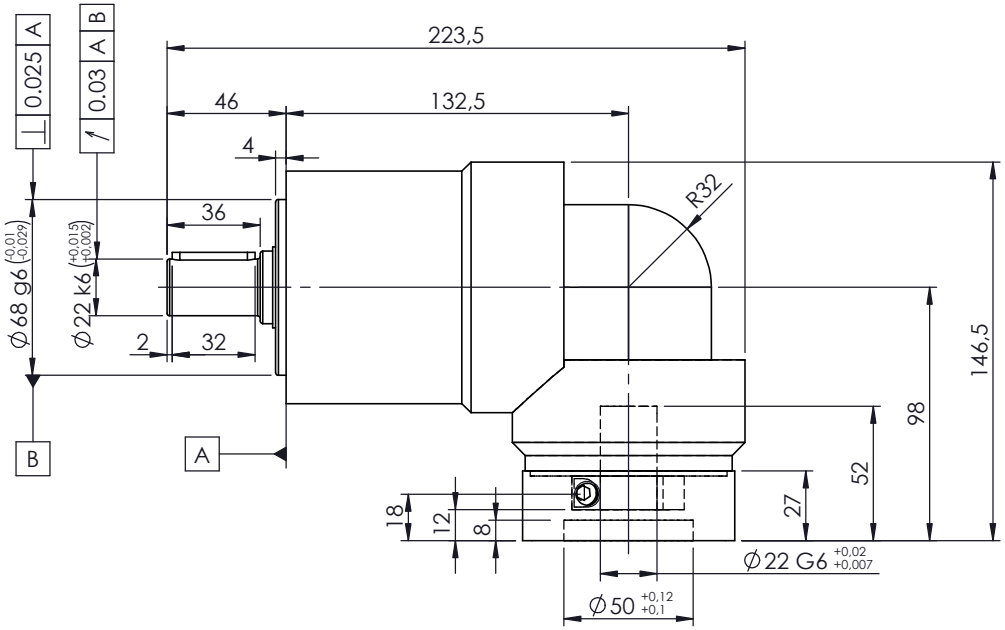

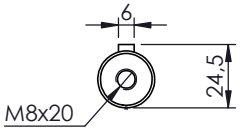

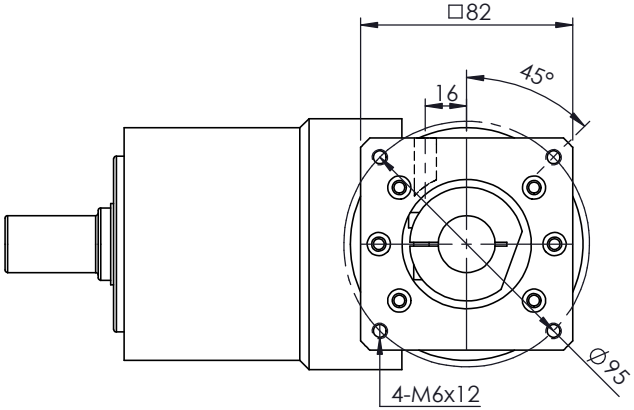

A bushing will be supplied if your motor shaft is smaller than ø22mm

For ratings and other technical data please refer to www.reckondrives.com

RECKON®
Innovation needs performance

Drawing n°

HCR-090-L1-K-22-F090-007

HELIKS-CI-RA-090 - 1 stage (Ratios 3 to 10)

with adaptating plate ø22x52-50-95-M6

Size	Date	Designed by
A4	08/20/2025	L. Bonnassieux