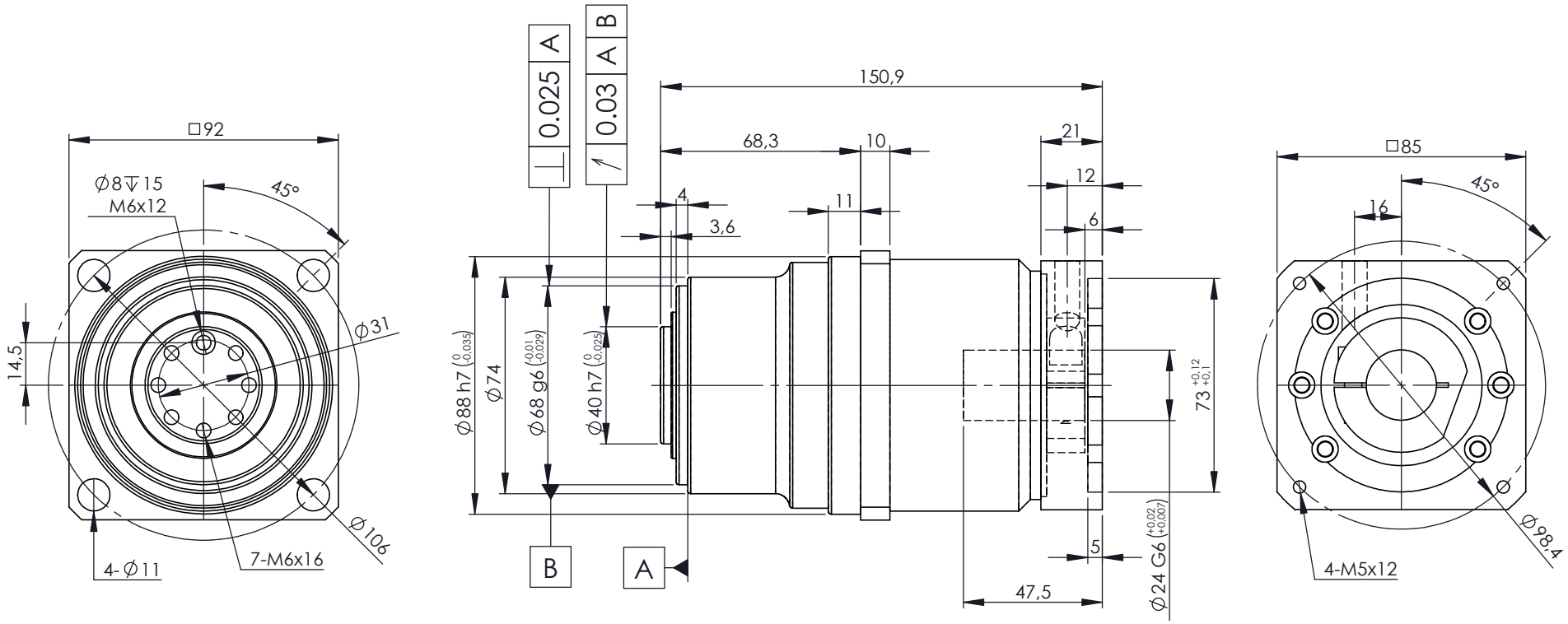

A bushing will be supplied if your motor shaft is smaller than ø24mm

For ratings and other technical data please refer to www.reckondrives.com

RECKON®
Innovation needs performance

Drawing n°
AP-090-L2P-F-24-F090-015

ACCESS-PU-ST-090 2 stages (Ratios 12 to 100)
with adaptating plate ø24x47,5-73-98,4-M5

Size	Date	Designed by
A4	07/22/2025	L. Bonnassieux