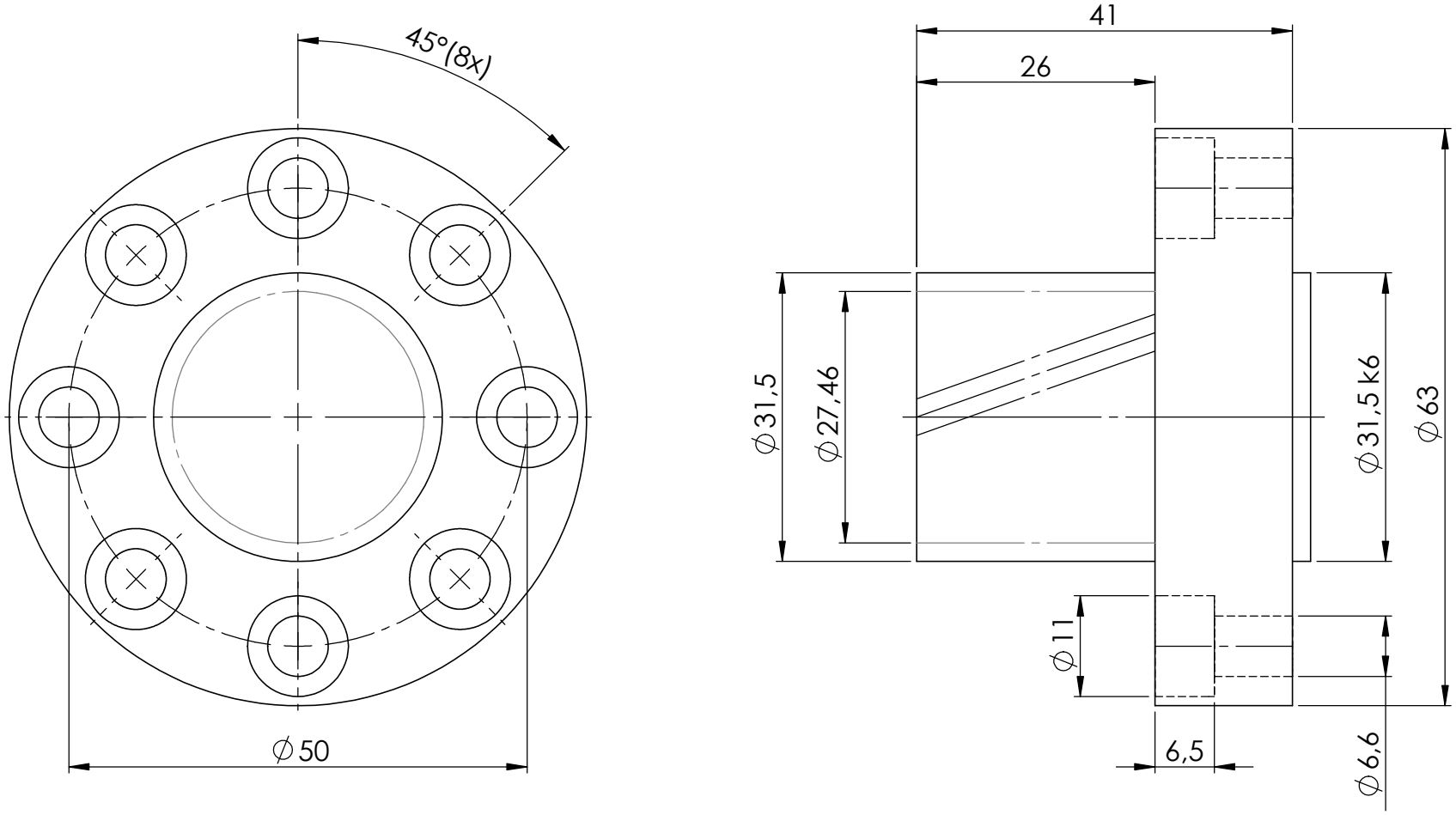

RECKON®
Innovation needs performance

Ordering code: PHPC6-A-M2-Z12-000

Mass: 0.42 kg

Description

Module 2 pinion Number of teeth : 12

Helix angle 19°31'42" (left hand)

Material 20CrMnTi Teeth ground to DIN 6 precision class

Teeth carburized and quenched to 58-62 HRC