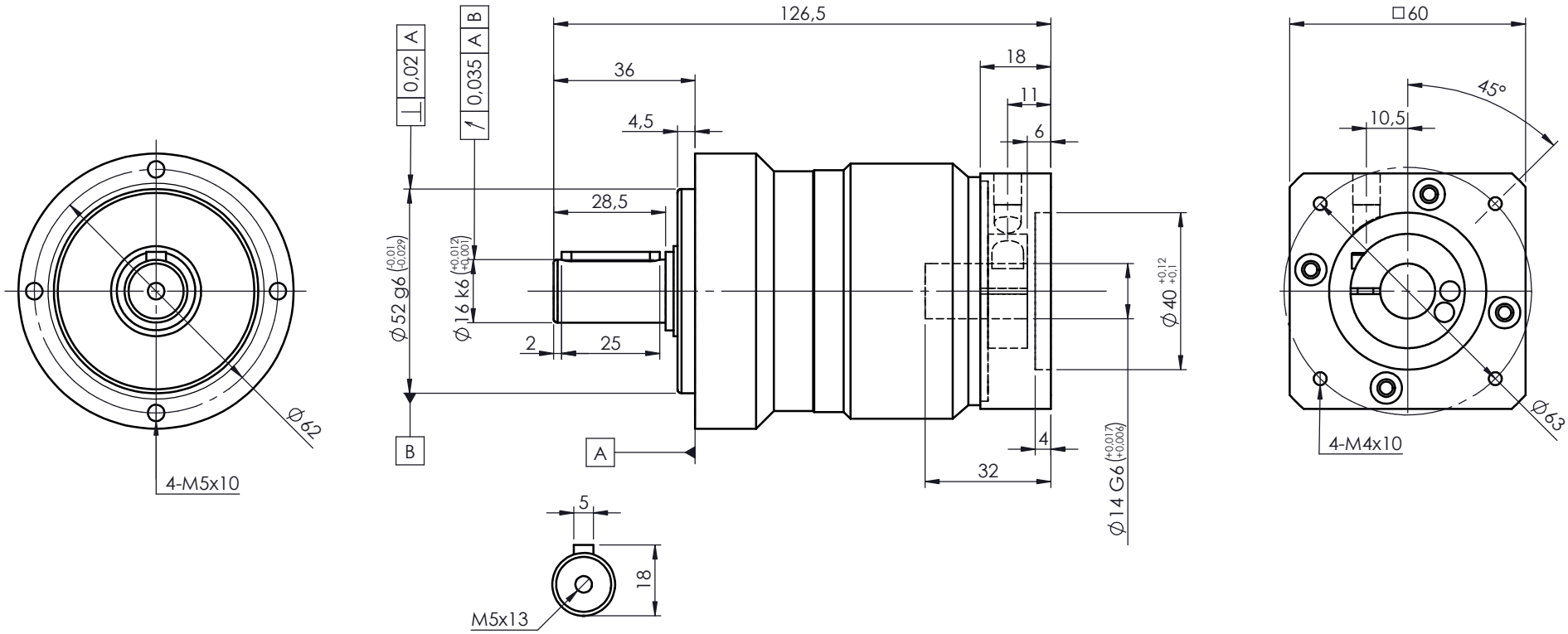

A bushing will be supplied if your motor shaft is smaller than ø14mm

For ratings and other technical data please refer to www.reckondrives.com

RECKON®
Innovation needs performance

Drawing n°

HC-070-L1-K-14-F060-111A

HELIKS-CI-ST-070 - 1 stage (Ratios 3 to 10)

with adaptating plate ø14x32-40-63-M4

Size	Date	Designed by
A4	09/03/2024	L. Bonnassieux