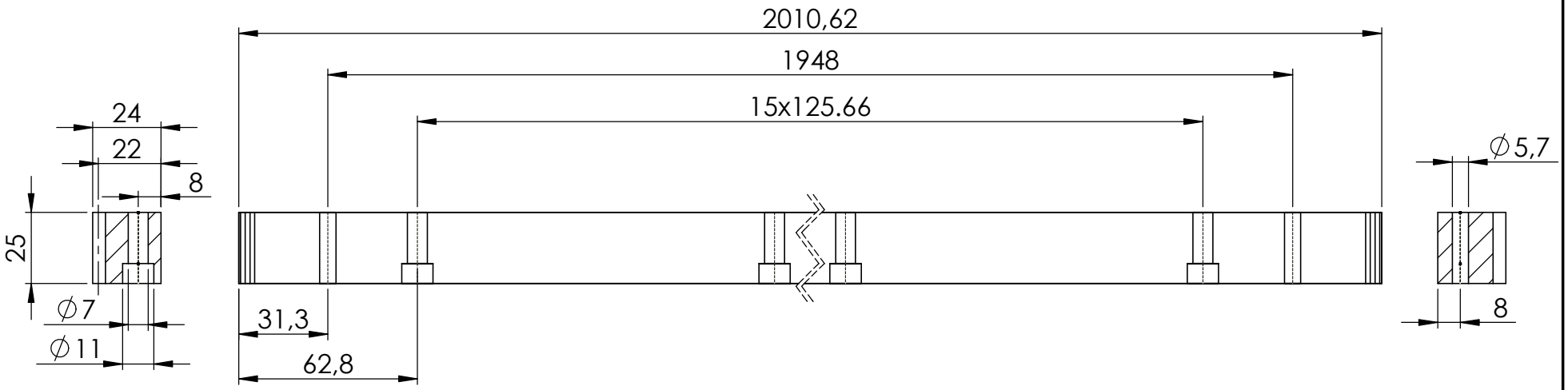

RECKON®
Innovation needs performance

Ordering code
M2-SCQ9-2000-H1-000

Mass:
8,37 kg

Description
Module 2 rack
Material 42CrMo Teeth quenched to 15-20 HRC
Teeth cut to DIN 9 precision class