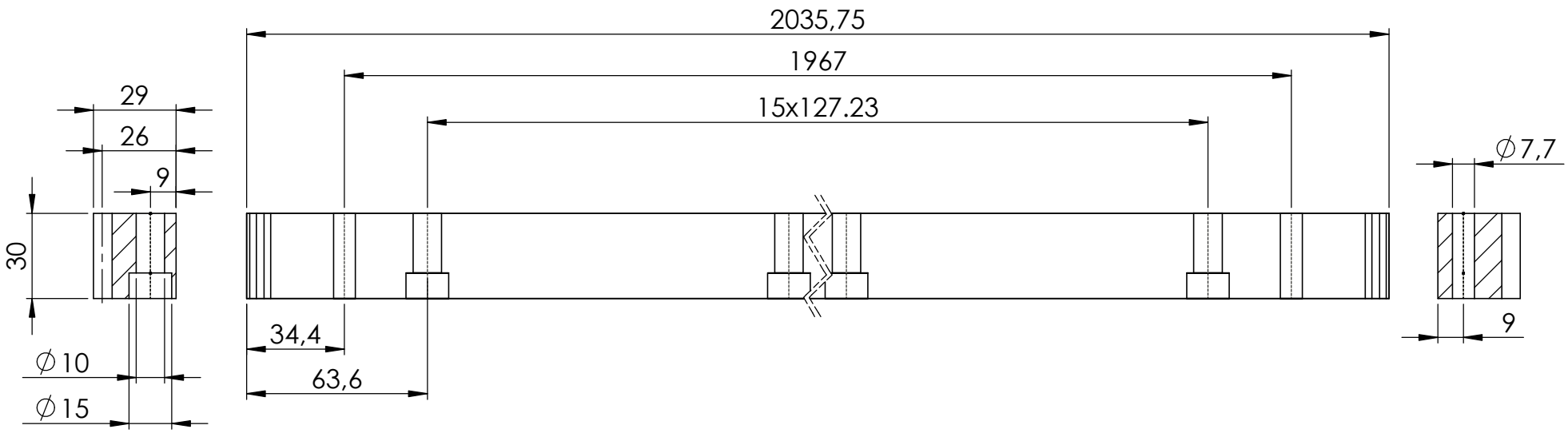

RECKON®
Innovation needs performance

Ordering code
M3-SCQ8-2000-H1-000

Mass:
11,84 kg

Description
Module 3 rack
Material 42CrMo Teeth quenched to 15-20 HRC
Teeth cut to DIN 8 precision class