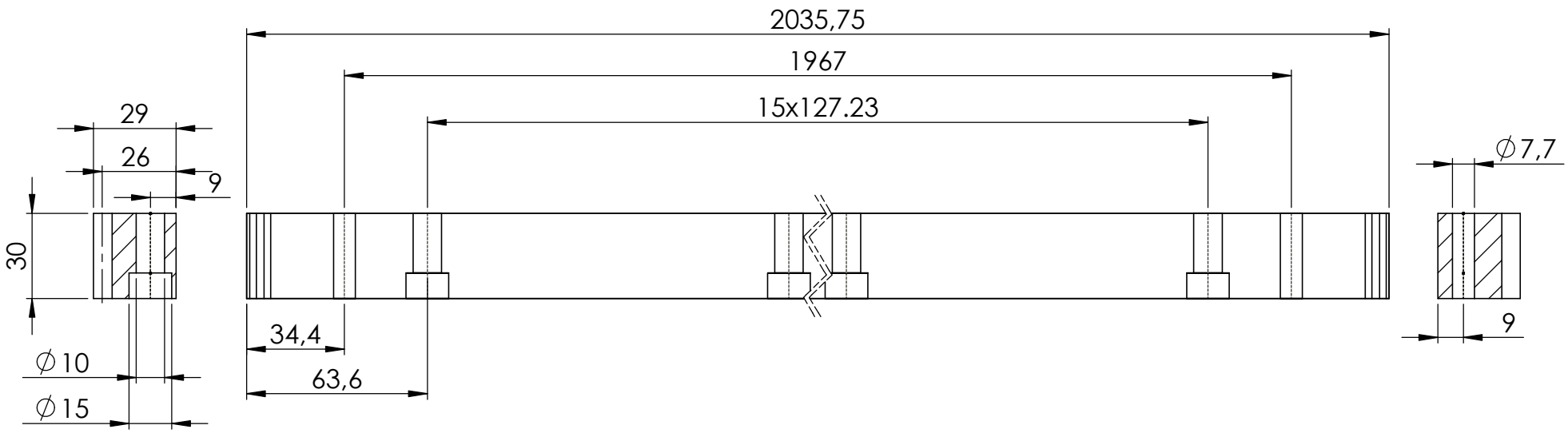

RECKON®
Innovation needs performance

Ordering code
M3-SAQ9-2000-H1-000

Mass:
11,84 kg

Description
Module 3 rack
Material C45 Teeth quenched to 15-20 HRC
Teeth cut to DIN 9 precision class