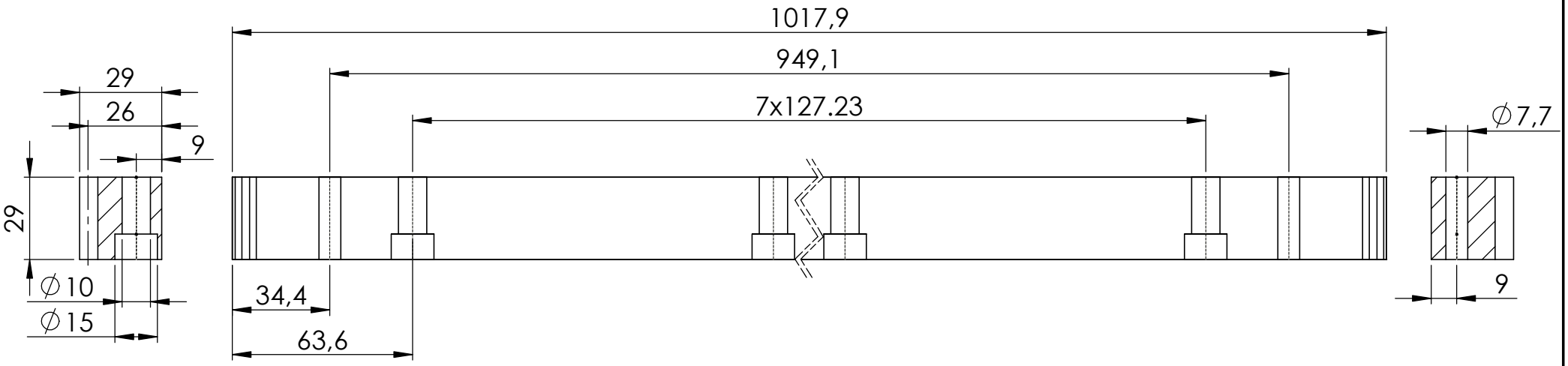


RECKON®
Innovation needs performance

Ordering code
M3-SCI7-1000-H1-000

Mass:
5.71 kg

Description
Module 3 rack
Material 42CrMo  Teeth hardened to 50-55 HRC
Teeth ground to DIN 7 precision class