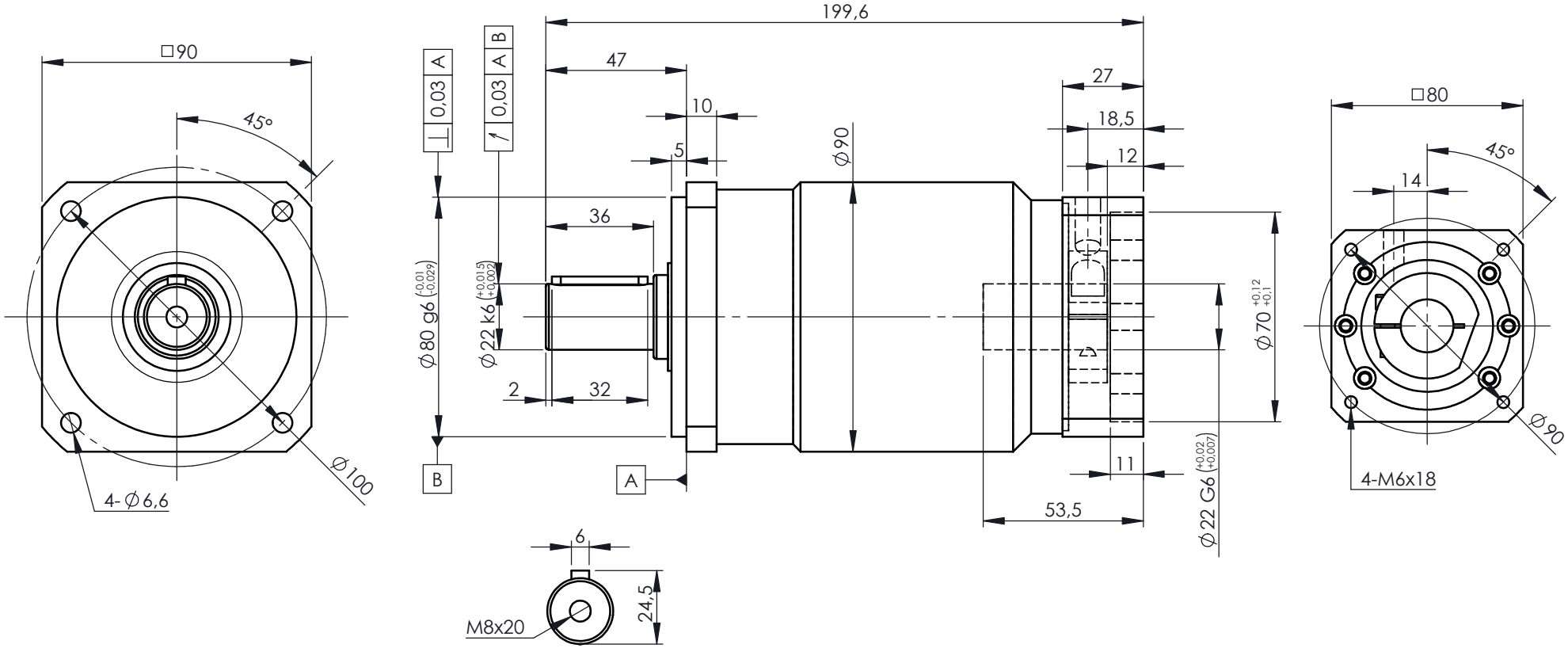

A bushing will be supplied if your motor shaft is smaller than ø22mm

For ratings and other technical data please refer to www.reckondrives.com

RECKON®
Innovation needs performance

Drawing n°

AS-090-L2P-K-22-F090-008

ACCESS-SQ-ST-090 - 2 stages (Ratios 16 to 100)

with adaptating plate ø22x53,5-70-90-M6

Size	Date	Designed by
A4	08/23/2024	L. Bonnassieux