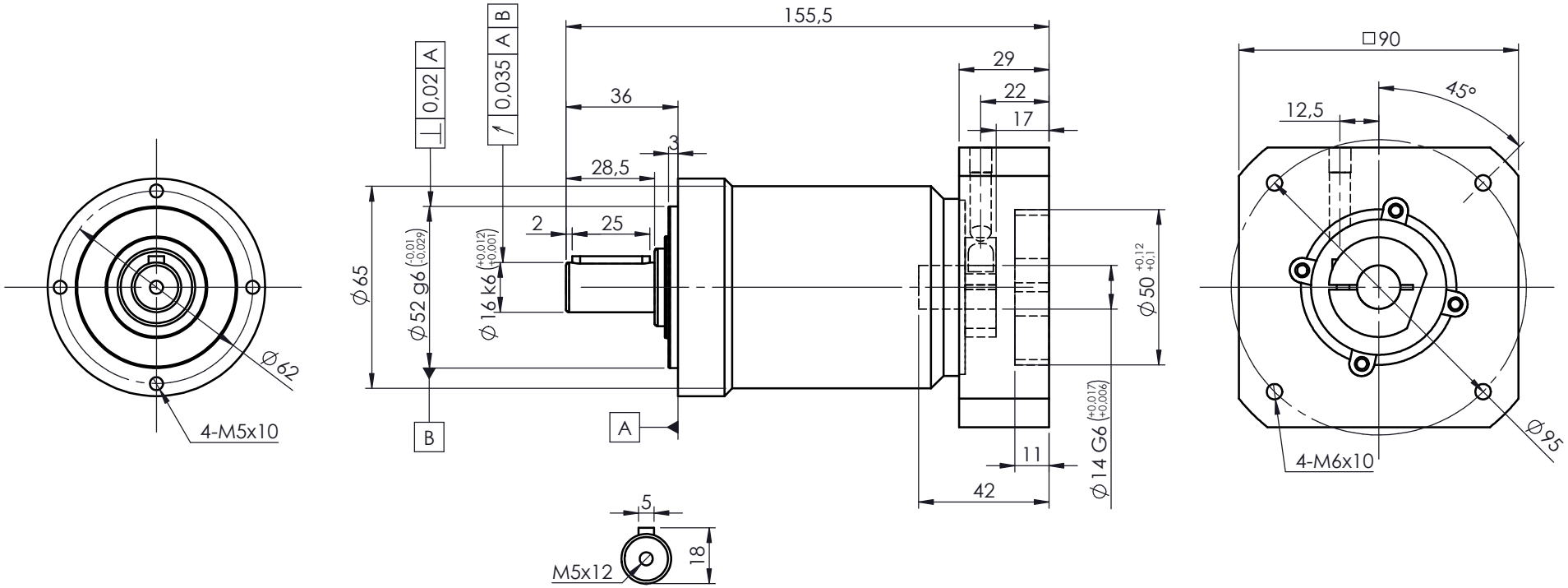

A bushing will be supplied if your motor shaft is smaller than ø14mm

For ratings and other technical data please refer to www.reckondrives.com

RECKON®
Innovation needs performance

Drawing n°

AC-070-L2P-K-14-F060-107

ACCESS-CI-ST-070 - 2 stages (Ratios 16 to 100)

with adaptating plate ø14x42-50-95-M6

Size	Date	Designed by
A4	08/20/2024	L. Bonnassieux