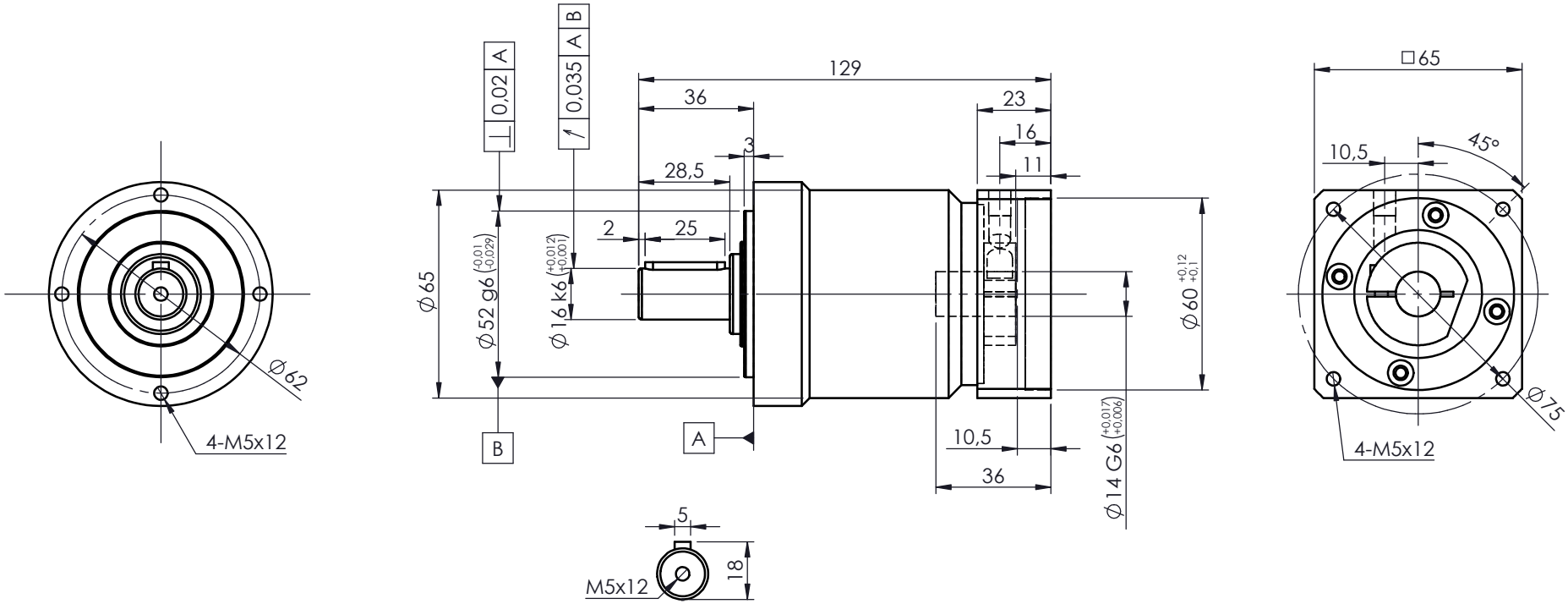

A bushing will be supplied if your motor shaft is smaller than ø14mm

For ratings and other technical data please refer to www.reckondrives.com

RECKON®
Innovation needs performance

Drawing n°

AC-070-L1-K-14-F060-104

ACCESS-CI-ST-070 - 1 stage (Ratios 3 to 10)

with adaptating plate ø14x36-60-75-M5

Size	Date	Designed by
A4	08/20/2024	L. Bonnassieux