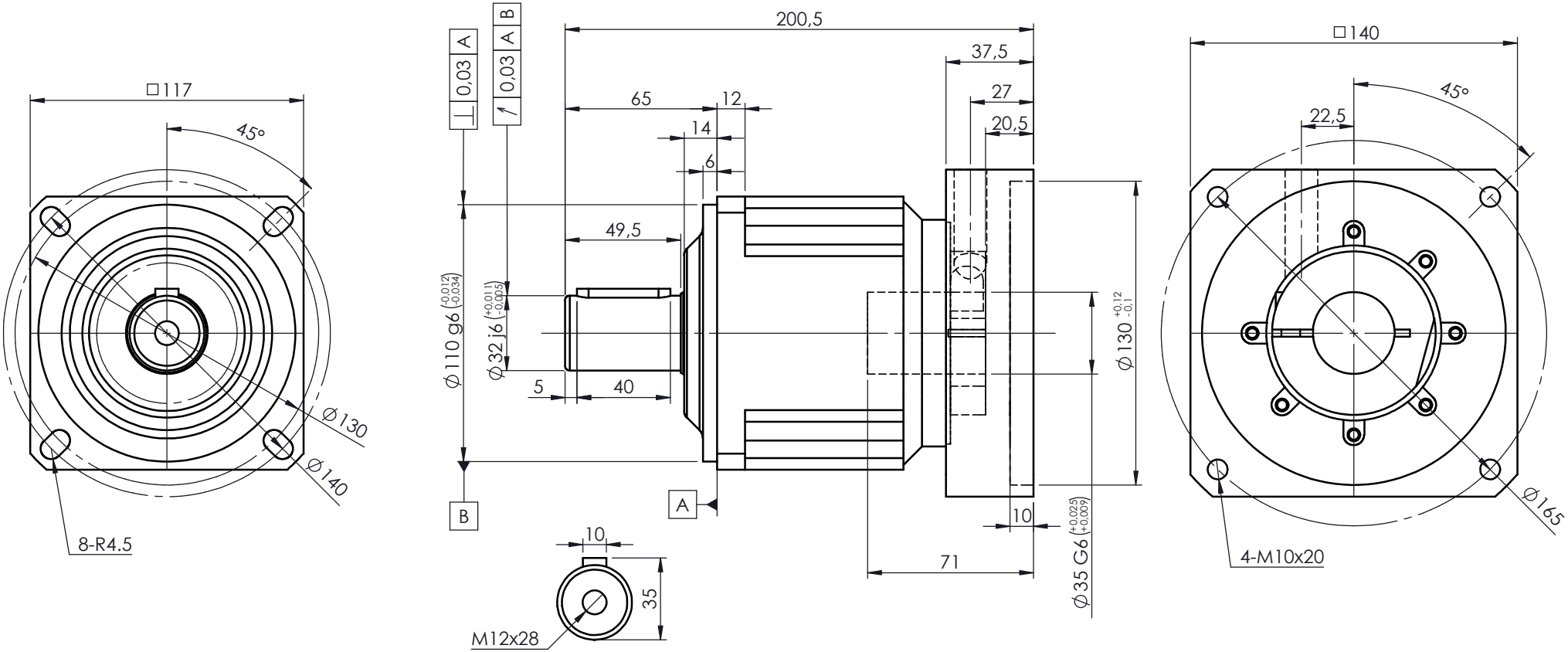

A bushing will be supplied if your motor shaft is smaller than ø35mm

For ratings and other technical data please refer to www.reckondrives.com

RECKON®
Innovation needs performance

Drawing n°

WS-120-L1-K-35-F120-022

WISER-SQ-ST-120 - 1 stage (Ratios 3 to 10)

with adaptating plate ø35x71-130-165-M10

Size	Date	Designed by
A4	09/10/2024	L. Bonnassieux