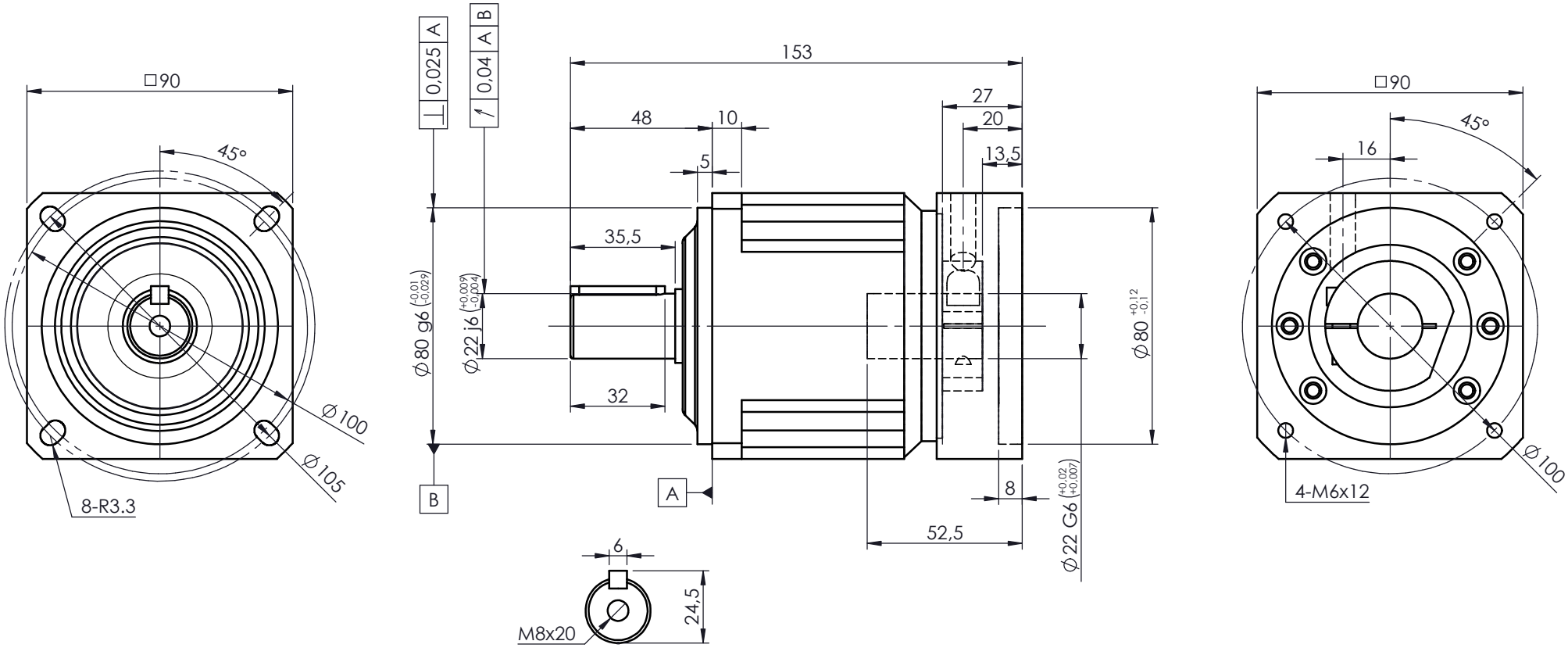

A bushing will be supplied if your motor shaft is smaller than ø22mm

For ratings and other technical data please refer to www.reckondrives.com

RECKON®
Innovation needs performance

Drawing n°

WS-090-L1-K-22-F090-010

WISER-SQ-ST-090 - 1 stage (Ratios 3 to 10)

with adaptating plate ø22x52,5-80-100-M6

Size	Date	Designed by
A4	09/10/2024	L. Bonnassieux