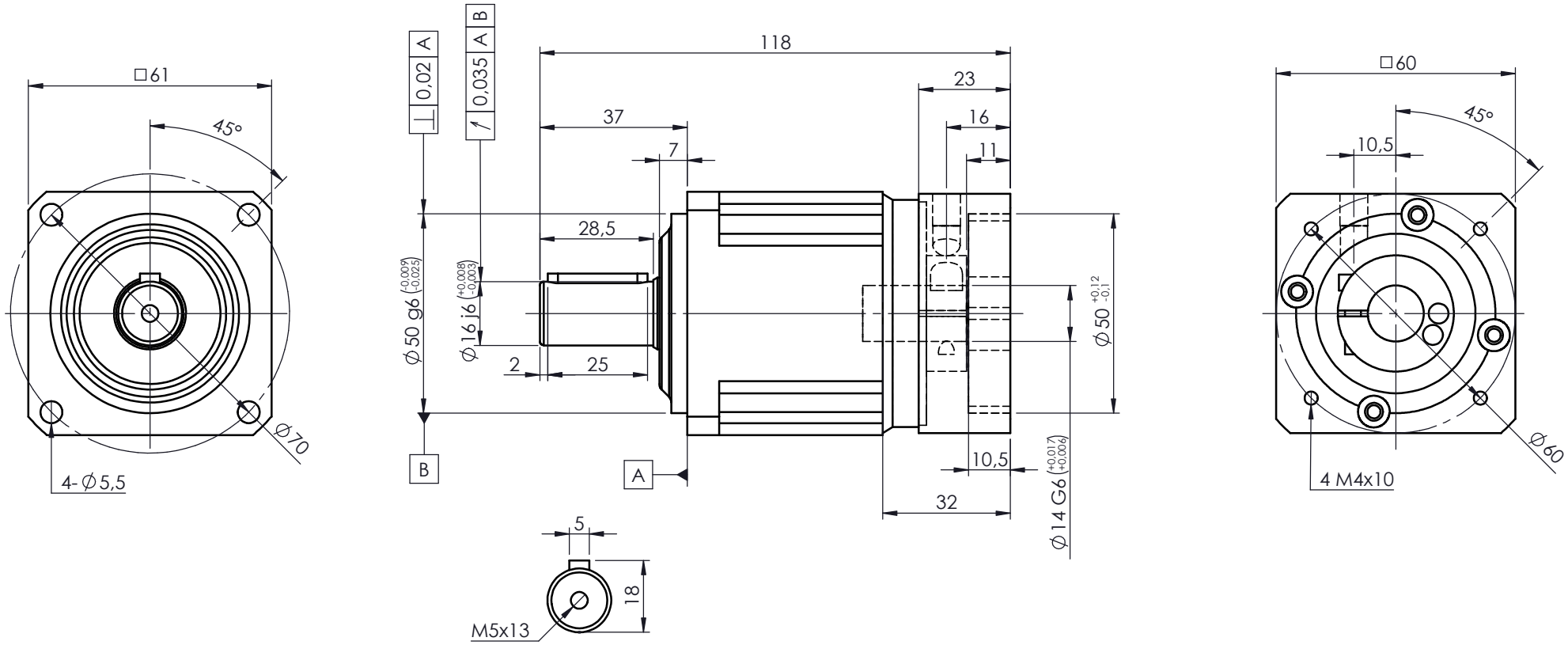

A bushing will be supplied if your motor shaft is smaller than ø14mm

For ratings and other technical data please refer to www.reckondrives.com

RECKON®
Innovation needs performance

Drawing n°

WS-060-L1-K-14-F060-176

WISER-SQ-ST-060 - 1 stage (Ratios 3 to 10)

with adaptating plate ø14x32-50-60-M4

Size	Date	Designed by
A4	09/10/2024	L. Bonnassieux